September 2020

Instructions
DC SUPER FLEX

Before you take this equipment in enterprise, **you must read** these operating instructions very carefully.

Dancutter a/s Livøvej 1 DK-8800 Viborg P +45 9651 2150 info@dancutter.dk **dancutter.com**

Contents

1.0 Manufactur

Dancutter a/s
Livøvej 1
DK-8800 Viborg

Tel: +45 9651 2150
info@dancutter.dk

CVR/VAT no.: 26672678

Technical support
If you experience problems with the cutter or if you have any technical questions, please write to **support@dancutter.dk**

Order
If you need spare parts or cutting heads, please write to **order@dancutter.dk**

2.0 Model Type

Identification:

System Type:	Mobile cutter unit
Model:	DC SUPER FLEX

3.0 Safety Instructions

- Only start the air sander when the cutter is in the pipeline.
- Remove the air connection when the cutter is rolled back onto the hose reel.
- Remove the air connection before refilling with washer fluid.
- Screws, adapter, cutting tools, etc. must be inspected weekly for wear and damage and must be replaced or tightened if necessary.
- Place a refrigeration dryer between the compressor and the cutter system.
- If the hose reel is to be placed on its side, the oil lubricator glass **MUST** be removed (13.4)

4.0 Technical Description

Extremely flexible and user-friendly cutter that can work in small pipes. The stainless steel frame contains 25 or 50 m supply hose which the cutter is fixed direct on to. The supply hose is supplying air, sprinkler and power to the cutter and is used to push the cutter to the working position hereafter the control of the cutter takes place on the supplied control Unit.

Working area is 70 - 150 mm / 3 - 6 in. In order to work in 150 mm the skip set, that is in the toolbox, have to be mounted. The DC
SUPER FLEX has a built-in slip ring to the camera, which allows 360° continuously rotation of the milling motor There is also built-in lock and slip ring on the stainless steel frame, so the cutter can freely be moved back and forth with the supply hose, while working with and operating the cutter.

The camera has a side-mounted spray nozzle for cleaning the camera lens, which is activated on the Control Unit, from which the continuously rotation and forward/reverse movement of the cutter is controlled by the two joystick. Cutter has a built-in forward/backward movement of 60 mm. Raising the milling motor is controlled also at one of these joysticks.

There is a built-in 12.1 ” color monitor in the lid of the control unit. The cutter can move through two successive 45° bends in a 75 mm pipe, and a 90° bend/angle of a relined 110 mm pipe.

Wheels on the stainless steel frame, provides an easy and hassle free movement to and from the workplace. There are mounted oil lubricates and water separator at the stainless steel frame.

Max water content delivered by compressor per m^3 supply air should be maximum: $20g/m^3$.

Cutting engine consists of an air motor, which runs at up to 15,000 revolutions per minute. It has an air consumption of 650 litres/minute and need 7 bar working pressure. The compact cutters are made from a resistant stainless steel alloy - which gives a minimum maintenance of the cutter.

The stainless steel frame measuring: Width: 550 mm. Length: 1000 mm. Height: 1030 mm.

Specifications

External diameter: 60 mm, 2.4 in	Air motor: 15000 RPM	Air preassure: 10 bar, 145 psi
Weight: 25 m: 58 kg, 128 lb 50 m: 71 kg, 156.5 lb	Air supply: 650 l/min, 22 cfm	Power supply: 110 / 220 VAC
L: 1000 mm - B: 550 mm - H: 1030 mm	Supply hose: 25 m or 50 m	

Control Unit

L: 350mm - B: 300 mm - H: 150 mm	Weight: 7 kg, 15.4 lb	Power supply: 24VAC

5.0 Service and Maintenance

- Always replace the covers on the Cable, Control Unit after use in order to protect the power connectors.
- Be careful with the compressed air line to avoid dirt getting into the air supply.
- Avoid water/moisture on the control unit, as it is not splash proof. Close it after use and hang it on the hose reel to protect the screen and the switches.
- It is recommended to remove the cover behind the camera and clean this area, especially after working in downpipes from below.

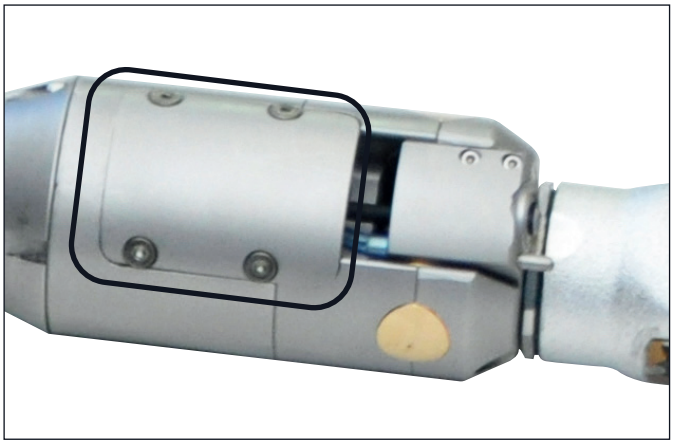

Service overwiew			
Part - parts - service	**Daily**	**Weekly**	**Other**
Cleaning the cutter	x		
Re-filling with pneumatik oil	x 13.4		
Lubricate the ball and piston	x		
Grease in the air motor		x	
Examine parts and tighten or replace them		x	
Clean the tilt function and lubricate with oil	x		
Lubricate the drum shaft with a couple of drops of oil		x	
Refill washer fluid			As required
Replace air filter			As required

- After use, place the cutter in the hose reel so that the air motor is vertical, so that any moisture formation can drain out of the air motor and into the hose.
- Only use distilled water or washer fluid on the cutter, as normal- water will cause lime scale on the valve and sluice.
- Pneumatic oil must be used on the oil lubricator and MARINE grease in the air motor.

6.0 User Instructions

The cutter is dimensioned so that it can work in all types of pipe, from 70 up to 125 mm. Depending on the internal condition of the pipe, the DC SUPER FLEX can be passed through 90° bends in a 100 mm tube. However, it is important that the black hoses (8.3) between the individual parts on the cutter are not subjected to twisting or bends exceeding 80 degrees when only the hose is bent.

With the extension kit, it is possible to work in tubes up to Ø150 mm. (See section 12)

Start by placing the hose reel and the control unit where the work will be performed. Then connect the power 110/220 V to the control Unit.

Connect the compressed air from the compressor with the air inlet (13.2) on the hose reel. In connection with the compressor, use a refrigeration dryer in order to avoid freezing in the small hoses and the sluice units.

Now guide the cutter out of the hose reel and into the pipe where it will work. If the cutter needs to pass through a sharp bend to reach the work site, the insertion should be followed on the monitor (9.8) so the operator can lift/swivel the cutter arm when it reaches the bend, thereby facilitating entry. Remember to lay
down the cutter arm again when the bend has been passed.

If a long distance must be travelled, it is recommended to use the foot plate that is mounted on the frame when inserting and removing the cutter.

The cutter is now in position and ready for operation.
Turn on the cutting air using the switch on the Control Unit (9.9) and let it run for a while before opening the tap to the camera's tank (7.5). Slowly lift the cutter arm by moving the joystick (9.3) back towards the operator so that the cutting head (8.7) touches the working area. For connector openings, it is important that the cutter is moved backwards and forwards. This is performed with the joystick (9.5) on the connector while simultaneously rotating the cone milling tool. This is performed by moving the joystick (9.13) to the right and left respectively.

It is important to have worked a large part on the connector before the cone milling tool goes through the sleeve, because this minimises the risk of the cutter/cone milling tool getting stuck inside the pipe. It is also recommended to reduce some of the pressure on the cutter arm just before the cone milling tool passes through the sleeve. This is performed by moving the joystick (9.13) forward. In order to move farther forward or backward than the hose length reaches, use the yellow hose to push/pull the cutter into position.

The speed of rotation can be adjusted on a potentiometer on the Control Unit. (9.12)

In order not to damage the conveying motor, it must be driven back to the closed state before the cutter is withdrawn from the tube after use. (8.1) The yellow hose is used to pull the cutter back to the hose reel when the cutting is completed. Remember to clean and lubricate the cutter according to section (5.0) for service and maintenance of DC SUPER FLEX. Close the tap to the camera's tank (7.5), disconnect the air and power supplies.

Close the Control Unit and hang it back on the hose reel.

7.0 Hose reel

1. Base plate
2. Filling the washer fluid
3. Camera cleaning
4. Lock and Slip rings house
5. Tap for air to the tank
6. Water separator and oil lubricator
7. Cutter

8.0 DC SUPER FLEX 25 M vs. 50 M

DC SUPER FLEX 25

DC SUPER FLEX 50

9.0 Cutter

1. Back - forward movement
2. Rotary motor
3. Flexible hose
4. Turning point with built-in slip ring and air and water sluice
5. Camera
6. Camera cleaning
7. Cutting Head
8. Grease

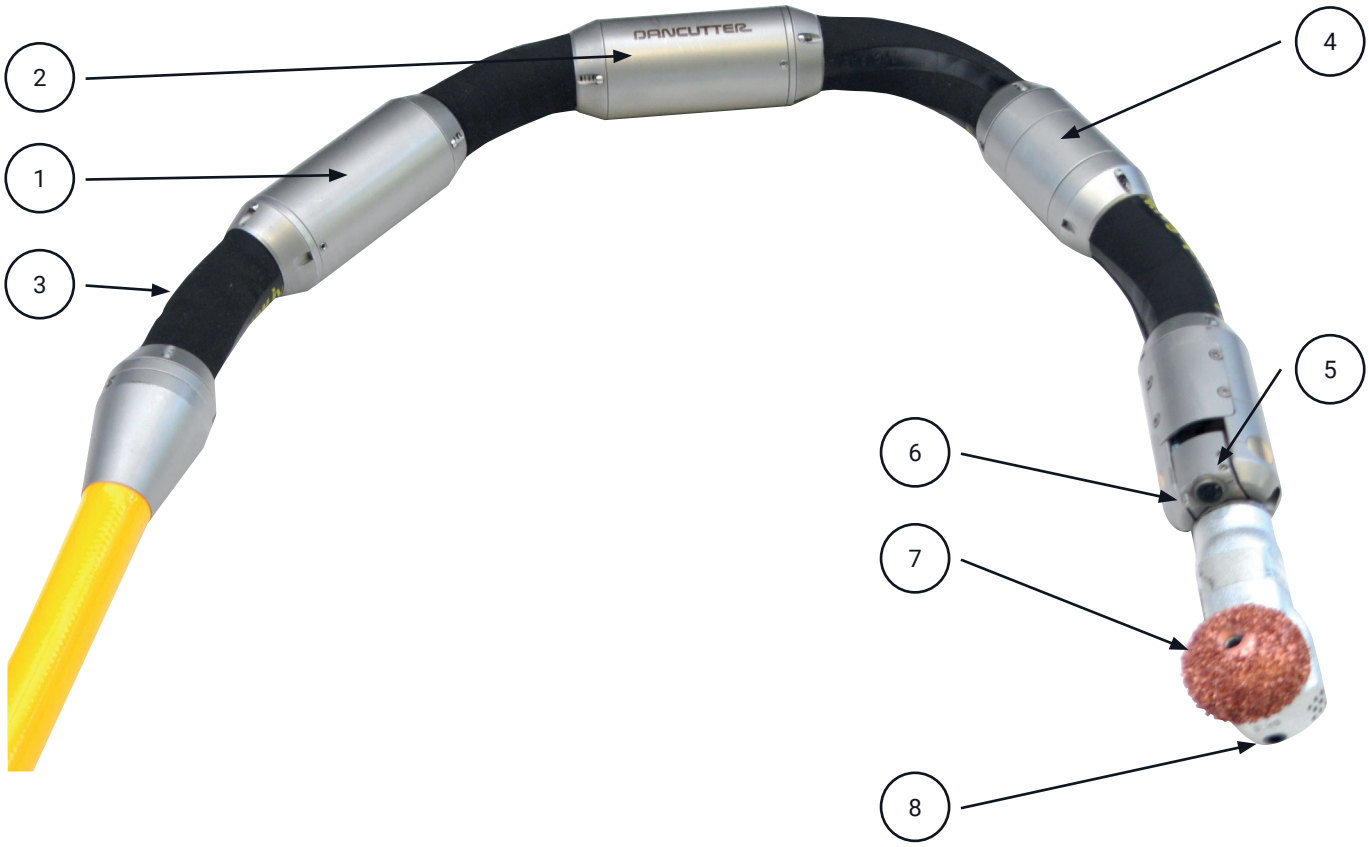

10.0 Control Unit

Protect the control unit – on which switches and joystick are mounted – from water/moisture/snow, as it is not watertight. Therefore take shelter with the control unit in rainy/snowy weather. Always close the lid after use to protect the screen and switches.

The following is a description of the individual switches on the control unit.

1. FW/BW
2. VIDEO OUT
3. VIDEO IN
4. OVERLOAD FW/BW
5. REVERSE FW/BW
6. CAMERA
7. LIGHT
8. GRINDER
9. REVERSE TURN
10. OVERLOAD TURN
11. REGULATOR
12. TURN/RAISE ARM
13. CAMERA CLEAN
14. EMERGENCY

Control Unit

L: 350 mm - B: 300 mm - H: 150 mm	Power supply: 110 / 220 VAC	Weight: 7 kg

1. FW/BW: use the joystick to operate the cutter's forward/back movement.

2. VIDEO OUT: outlet for showing the camera image on an external screen.

3. VIDEO IN: outlet for an external camera, if necessary (turn the camera knob to "2").

4. OVERLOAD FW/BW: the green LED should preferably flicker/shine when the forward/back drive is operating. If the electric motor is overloaded, the red LED will shine and an acoustic alarm will sound for about 5 seconds. After this, the power supply to the motor will be disconnected. The controls will switch back on again after about 10 seconds.

5. REVERSE FW/BW: this function reverses the signal to the "FW/BW" joystick. Use this function if you are using an external camera sees in the opposite direction from the camera on the cutter. Turn the knob to the "left" position for normal operation. Turning the knob to the right makes the joystick work in reverse.

6. CAMERA: use this switch to turn on the camera on the cutter. (Pos. "2": external camera) (Pos. "1": camera on the cutter)

7. LIGHT: use this switch to turn on the camera light.

8. GRINDER: start the Cutter by turning the switch to pos. "1".

9. REVERSE TURN: this function reverses the signal to the joystick "turn/raise arm". Use this function if you are using an external camera which sees in the opposite direction from the camera on the cutter. Turn the knob to the "left" position for normal operation. Turning the knob to the right makes the joystick work in reverse. The "arm: up/down" function is unchanged regardless of the switch position.

10. OVERLOAD TURN: the green LED should preferably flicker/shine while the rotation function is operating. If the electric motor is overloaded, the red LED will shine and an acoustic alarm will sound for about 5 seconds. After this, the power supply to the motor will be disconnected. The controls will switch back on again after about 10 seconds.

11. REGULATOR: use this knob to adjust the speed of the cutter's rotation function. The function is not available on DC MAXI FLEX.

12. TURN/RAISE ARM: moving the joystick right or left activates the cutter's rotation function to the right/left. Pulling the joystick away from the screen raises the cutter arm. Pushing the joystick towards the screen lowers the arm. The up/down speed of the arm is preset at the factory.

13. CAMERA CLEAN: pressing the button activates the camera cleaner. The button shines green when the function is active. Press the button again to switch off the camera cleaner (the light in the button will turn off).

14. EMERGENCY: activating the emergency-stop button will disconnect all 24 V DC supplying the electric motor and the magnetic valves for air. The only function retained is the power supply for the cutter's camera so it is possible for the operator to view the cutter as it is being withdrawn from a pipeline.

WiFi is built into the control unit to provide a wireless connection for a VR headset (optional accessory).

Always replace the covers on the **CABLE AND CONTROL UNIT** after use in order to protect the power connectors.

Always hang the Control Unit in its place after use.

11.0 Cutting tools

The standard cutter is equipped with an AG 50 air engine, where air is blown forward to blow dust away from the camera.

The cutting tool is replaced by using the Allen key supplied. It may be necessary to clean the bolt in the grin ding motor, by which the cone milling tool is secured first.

Dancutter recommends using the following cutter heads for re-opening of laterals.

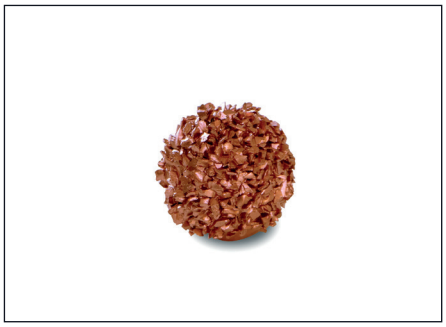

DK2020-18

DK2629-16

DK3015-16

DK3713-16

DK4623-16

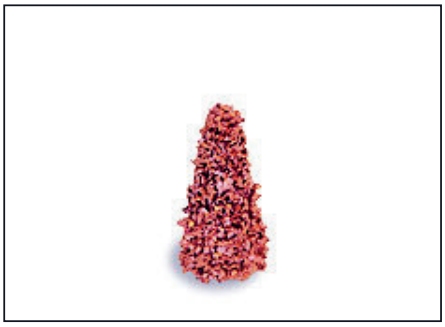

DJ1938-14

Specials tools for 75 mm/3”

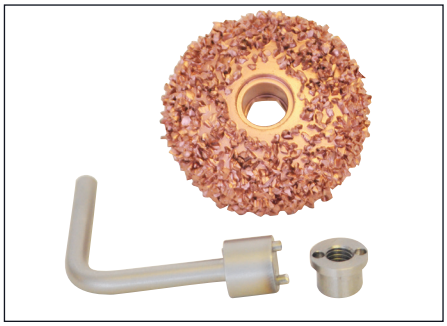

Cutter head DK3713-16
Special tool DK3713-V - DK3713-B

Dancutter recommends using the following diamond heads for concrete.

DKA1022

DD4623

DD3015

Dancutter recommends using the following cutting discs for iron/steel

DD9008

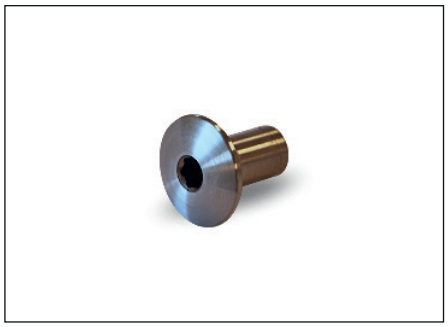

DD9023

12.0 Replacing the Air Motor

Raise the arm so that the 5mm Allen key can be inserted and loosen the screw on both sides (11.1).

The air motor can then be pulled out and replaced.

Install the motor in revers order.

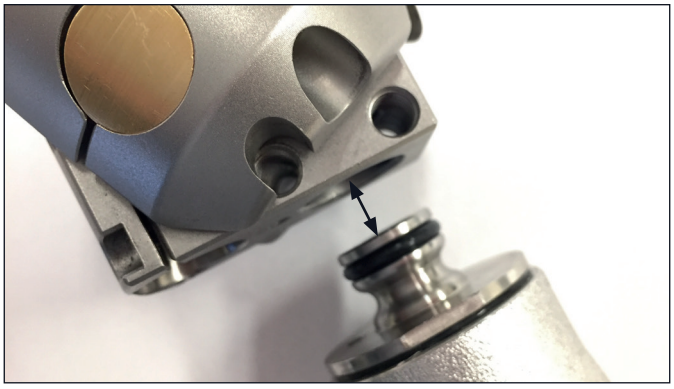

11.1

13.0 Water Separator and Oil Lubricator

Fill oil before using the cutter. **REMEMBER**, replenishing the oil when the top of the oil can be seen in the glass (13.5). It is important that the glass does not run out of oil, as this will damage
the air motor and impair its performance.

Only use pneumatic oil (Part number: DCHY29307)

The filter (Part number P57106) in the water separator (13.4) must be changed as necessary. In case of problems with the air supply, clean the filter if necessary.
The mist lubricator must not be adjusted, as this has been configured at the factory.The mist lubricator must be kept upright during transport. If the fram is placed on its side, the glass must
be removed to prevent oil flowing into the camera tank.

DURING transport with the device, always close the tap at the air outlet for the camera tank.

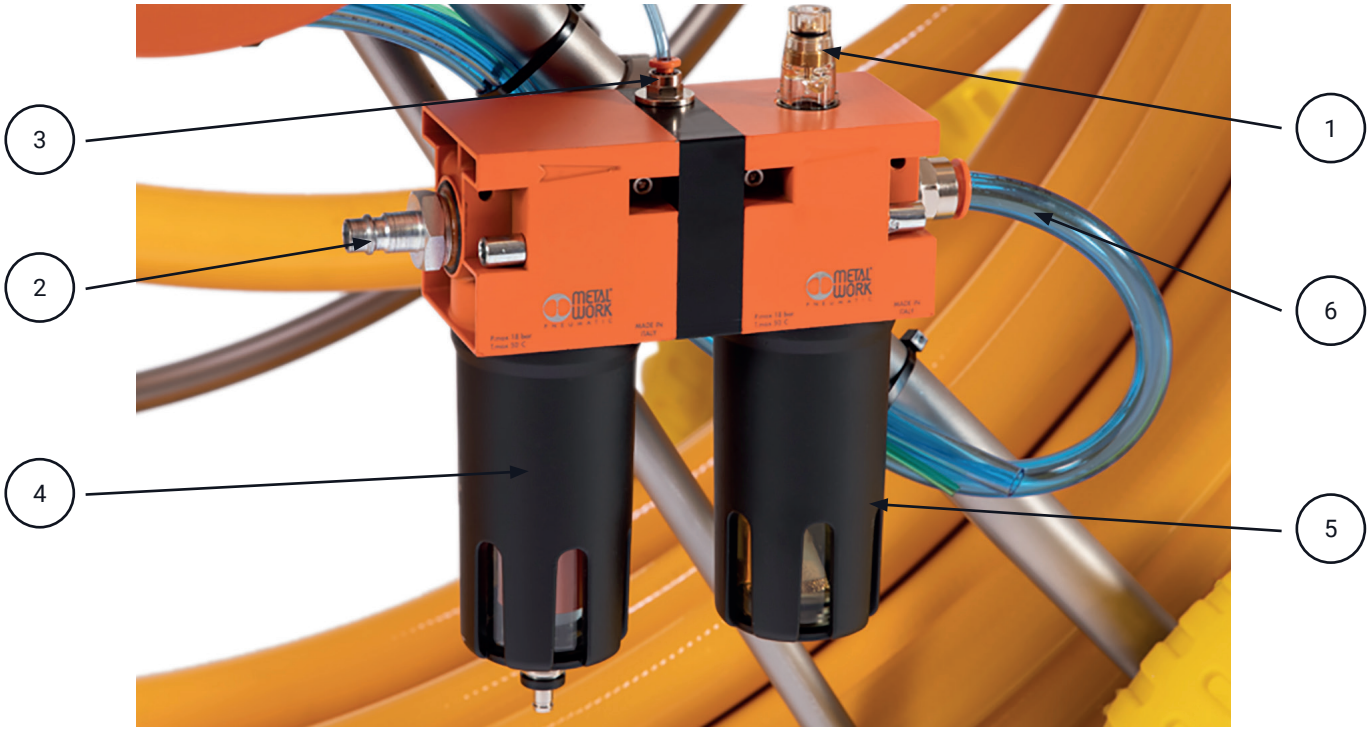

1. Adjusting the mist lubricator
2. Air inlet from the compressor
3. Air outlet for the camera tank
4. Atomatic water separator
5. Oil tank
6. Air outlet for sluice

14.0 Installation of centring tool set w/brushes

The hollow/recess on the individual half-globes in the centring tool set, must **ALWAYS** face towards the air motor. Were the spotfacings are tapped into the Half-Globes. This is especially important for the unit mounted at the rotation point (8.4), as it would otherwise tighten and prevent the smooth rotation of the air motor.

Installation of centring tool set

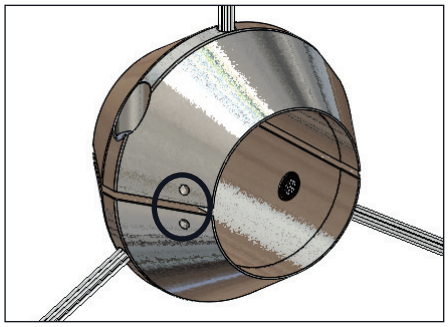

Position the spotfacings facing forwards.

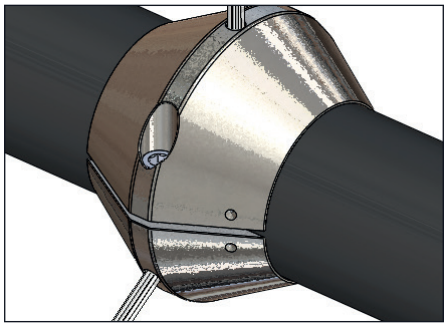

The centring kit must be tightened so that the increase on the trailing edge of the individual places on the cutter is continued up the individual blocks.

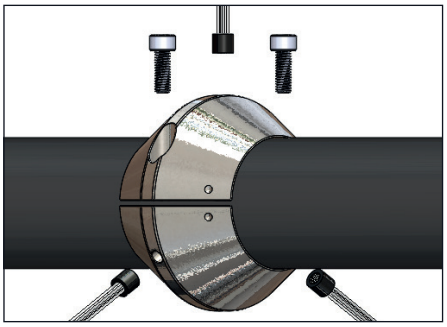

When operating in the downpipes, mount the supplied brushes into the holes on the individual blocks in the centring tool set.

15.0 Installation of centring tool set w/wheels

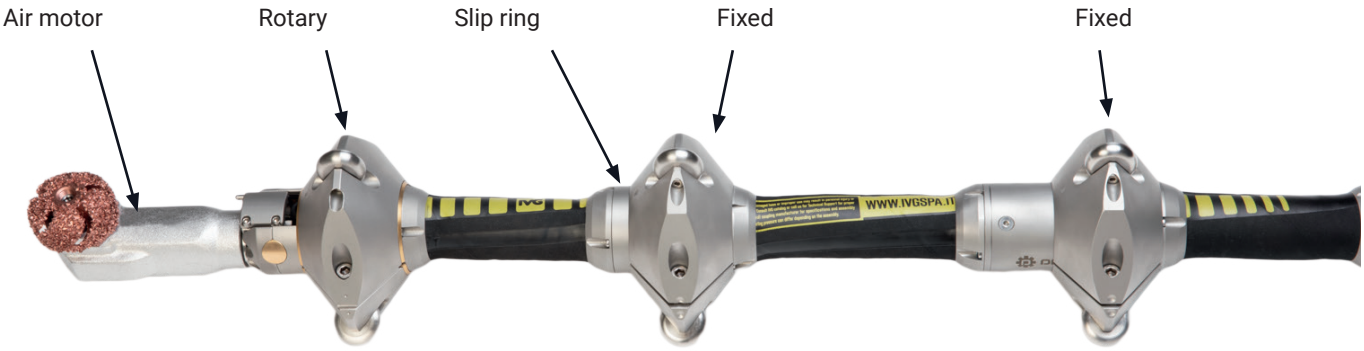

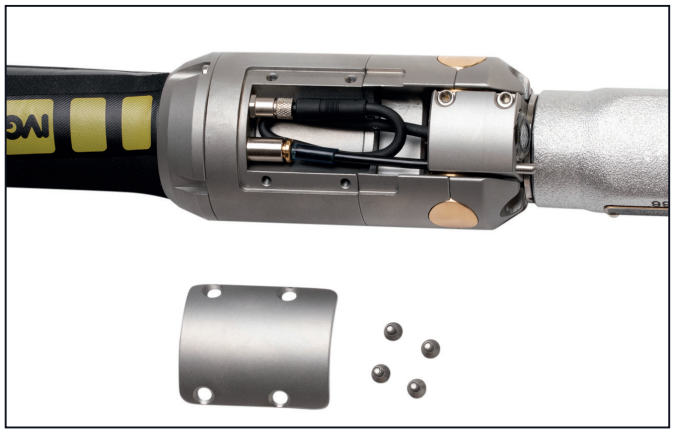

IMPORTANT! Remove the cover before installing the centring tool set.

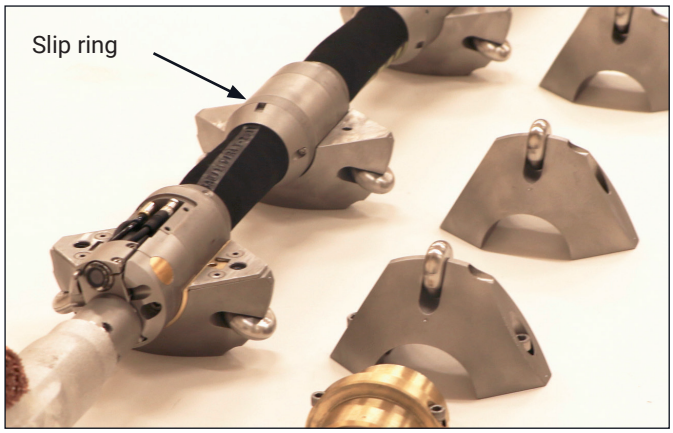

Place the cutter underneath the three centrings rings so that the rotary centring ring is flush with the air motor.
NOTE! Place the middle centring ring so that the internal clearance allows the slip ring system to rotate.

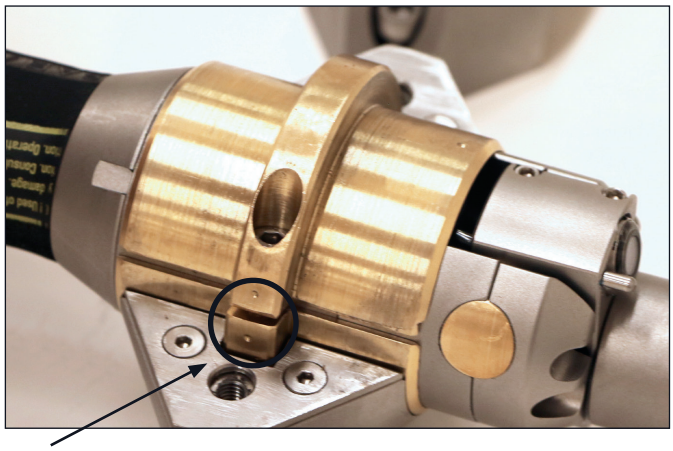

There is a spotfacing on the periphery of each part of the centring tool set. When installing, it is **VERY IMPORTANT** that the spotfacings are positioned one on top of the other.

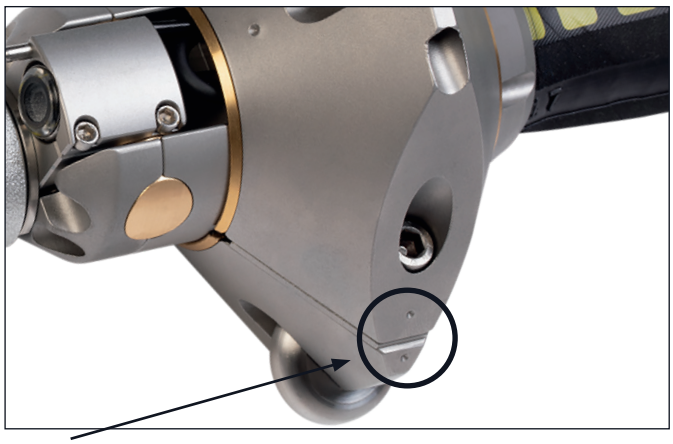

Position the spotfacings one on top of the other.

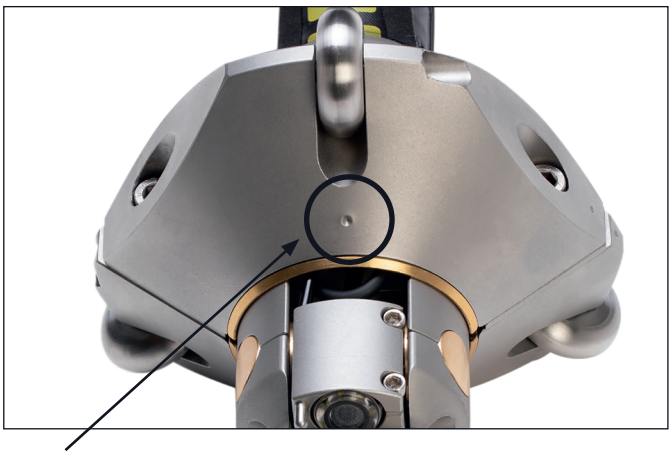

There is a spotfacing on each of the centring rings to indicate which side of the ring should face the air motor.

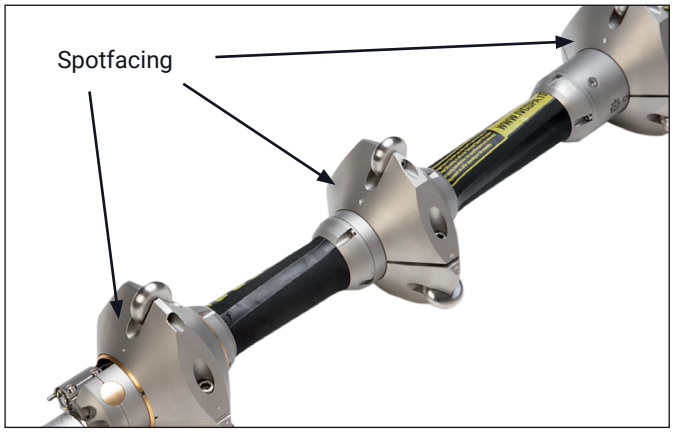

Position the spotfacings facing forwards.