VANAIR®
POWER TO GO™

VIPER™ GAS

GASOLINE ENGINE-DRIVE, 60-80 CFM / 100 PSIG, ROTARY SCREW AIR COMPRESSOR

OPERATION MANUAL & PARTS LIST

NOTE

This publication contains the latest information available at the time of preparation. Every effort has been made to ensure accuracy.

Vanair Manufacturing, Inc. reserves the right to make design change modifications or improvements without prior notification.

Read this manual before installing, operating or servicing this equipment. Failure to comply with the operation and maintenance instructions in this manual will VOID THE EQUIPMENT WARRANTY.

NOTE

Making unauthorized modifications to the system components WILL VOID THE WARRANTY!

Always inform Vanair Manufacturing, Inc., before beginning any changes to the Viper Gasoline system.

NOTE

Use only Vanair Vanguard™ Premium Synthetic Compressor Oil and Genuine Vanair Parts. Inspect and replace damaged components before operation. Substituting non-Vanair oil or non-genuine Vanair filter components WILL VOID THE COMPRESSOR WARRANTY!

Vanair Manufacturing, Inc.

10896 West 300 North

Michigan City, IN 46360

Telephone (toll free): (800) 526-8817

Service (toll free): (844) VAN-SERV

(844) 826-7378

Telephone: (219) 879-5100

Service Fax: (219) 879-5335

Parts Fax: (219) 879-5340

Sales Fax: (219) 879-5800

www.vanair.com

VANAIR®
POWER TO GO™

P/N: 090071-OP_r1

Effective Date:

AUGUST - 2020

KEEP THE MANUAL WITH THE VEHICLE

©2020 Vanair Manufacturing, Inc.
All rights reserved

AIR N ARC®

ALL-IN-ONE POWER-SYSTEMS®

RELIANT™ SERIES

POWERFLEX™ SERIES

PRO SERIES

VIPER™ SERIES

VANAIR VANTAGE WARRANTY

This limited warranty supersedes all previous Vanair warranties and is exclusive with no other guarantees or warranties expressed or implied.

LIMITED WARRANTY—Subject to the expressed terms and conditions set forth below, Vanair Mfg., Inc. ("Vanair"), of Michigan City, Indiana (USA), warrants to the original retail purchaser of new Vanair equipment that such equipment is free from defects in materials and workmanship when shipped by Vanair.

For warranty claims received by Vanair within the applicable warranty periods described below, Vanair will repair or replace any warranted equipment, parts or components that fail due to defects in material or workmanship or refund the purchase price for the equipment, at Vanair's discretion. Vanair is not responsible for time or labor to gain access to the machine to perform work. WARRANTY WILL BE VOID IF GENUINE VANAIR PARTS AND FLUIDS ARE NOT USED.

ALL WARRANTY OR RETURNS MUST BE PRE-AUTHORIZED PRIOR TO PERFORMING ANY WARRANTY WORK.

Vanair must be notified in writing within thirty (30) days of any such defect or failure. All warranty or returns must be pre-authorized in writing prior to performing warranty work. Call Vanair for process and forms. Vanair will provide instructions on the warranty claim procedures to be followed.

Warranty will commence upon receipt of the Warranty Registration Card. If the Warranty Registration Card is not received within six (6) months of shipment from Vanair, the warranty commencement date shall be thirty (30) days from the date of shipment from Vanair. Records of warranty adherence are the responsibility of the end user.

1. Lifetime Warranty Parts – 3 Years Labor
   - Rotary Screw Air Compressor Air End
2. 6 Years Parts – 3 Years Labor
   - Vanair Super Capacitor (VSC)
3. 3 Years Parts – 1 Year Labor
   - Reciprocating Compressor Air End
   - Generators
   - Welders
4. 2 Years Parts – 1 Year Labor
   - Hydraulic Motors
   - Hydraulic Pumps
5. 1 Year Parts – 1 Year Labor
   - All electronics including, but not limited to:
     - I) I/O Boards
     - II) Modules
     - III) Panel Boxes
     - IV) Instrumentation
     - V) Clutches
     - VI) Solenoids
     - VII) Running Gear/Trailers
     - VIII) Compressor/Hydraulic Coolers, including Fan and Radiator Core

This Limited Warranty shall not apply to:

1. Consumable components, such as shaft seals, valves, belts, filters, capacitors, contactors, relays, brushes or parts that fail due to normal wear and use.
2. Items furnished by Vanair, but manufactured by others, such as engines and trade accessories (these items are covered by the manufacturer's warranty, if any).
3. Equipment that has been modified by any party other than Vanair or equipment which has not been used and maintained in accordance with Vanair's specifications.
4. Equipment which has been improperly installed and/or improperly operated, based upon Vanair's specifications for the equipment or industry standards.
5. Equipment installed by non-authorized or third party personnel. Vanair products are intended for purchase and use by commercial/industrial users and persons trained and experienced in the use and maintenance of industrial equipment.

In the event of a warranty claim covered by this Limited Warranty, the exclusive remedies shall be, at Vanair's sole discretion: (i) repair; or (ii) replacement; (iii) where authorized in writing by Vanair in appropriate cases, the reasonable cost of repair or replacement at an authorized Vanair service facility ; or (iv) payment of (or credit for) the purchase price (less reasonable depreciation based upon actual use) upon return of the equipment at the warranty claimant's risk and expense. Vanair will pay standard ground freight for any warranty item shipped to and from Vanair or (Vanair designated facility) within the first year of the applicable warranty period. Any additional expedited freight cost is the responsibility of the purchaser.

TO THE GREAT EXTENT PERMITTED BY APPLICABLE LAW, THE REMEDIES PROVIDED HEREIN ARE THE SOLE AND EXCLUSIVE REMEDIES APPLICABLE TO THE VANAIR EQUIPMENT. IN NO EVENT SHALL VANAIR BECOME LIABLE FOR DIRECT, INDIRECT, SPECIAL, PUNITIVE, INCIDENTAL OR CONSEQUENTIAL DAMAGES (INCLUDING LOSS OF PROFIT OR LOST BUSINESS OPPORTUNITY), WHETHER BASED ON CONTRACT, TORT OR ANY OTHER LEGAL THEORY. IN NO EVENT SHALL VANAIR BECOME OBLIGATED TO PAY MORE ON ANY WARRANTY CLAIM THAN THE PURCHASE PRICE ACTUALLY PAID BY THE ORIGINAL RETAIL PURCHASER.

THIS LIMITED WARRANTY IS MADE IN LIEU OF ALL OTHER WARRANTIES, EXPRESS OR IMPLIED, INCLUDING THE WARRANTIES OF MERCHANTABILITY AND/OR FITNESS FOR A PARTICULAR PURPOSE, OR ANY OTHER WARRANTY OR GUARANTY ARISING BY OPERATION OF LAW. ANY WARRANTY NOT EXPRESSLY PROVIDED HEREIN, IMPLIED WARRANTY, GUARANTY AND ANY REPRESENTATION REGARDING THE PERFORMANCE OF THE EQUIPMENT, AND ANY REMEDY FOR BREACH OF CONTRACT, IN TORT, OR ANY OTHER LEGAL THEORY WHICH, BUT FOR THIS PROVISION, MIGHT ARISE BY IMPLICATION, OPERATION OF LAW, CUSTOM OF TRADE, OR COURSE OF DEALING ARE EXCLUDED AND DISCLAIMED BY VANAIR.

Some states in the United States of America do not allow limitations of how long an implied warranty lasts, or the exclusion of incidental, indirect, special or consequential damages, and as such, the above limitations and exclusions may not apply to you. This warranty provides specific legal rights. Other rights may be available to you, but may vary from state to state.

In Canada, legislation in some provinces provides for certain additional warranties or remedies other than as stated herein, and to the extent that they may not be saved, the limitations and exclusions set out forth above may not apply. This Limited Warranty provides specific legal rights, and other rights may be available, but may vary from province to province.

VANAIR®
MOBILE POWER SOLUTIONS ™

(844) VAN - SERV

SERVICE@VANAIR.COM

PARTS@VANAIR.COM

10896 W. 300 N.

MICHIGAN CITY, IN 46360

(800) 526-8817

VANAIR.COM

EFFECTIVE: JUNE 15, 2020

TABLE OF CONTENTS

WARRANTY ..... BEHIND COVER

TABLE OF CONTENTS ..... TOC - I

WARRANTY CLAIMS PROCEDURE ..... WARRANTY - I

CLAIMS PROCESS FOR WARRANTED PARTS ..... WARRANTY - I

PROCEDURE ..... WARRANTY - I

Figure W-1: Machine Serial Plate / Serial Number Location ..... WARRANTY - I

SECTION 1: ⚠ SAFETY ..... 1 - 1

1.1 ⚠ GENERAL INFORMATION ..... 1 - 1

1.2 ⚠ DANGERS, WARNINGS, CAUTIONS AND NOTES ..... 1 - 1

1.3 ⚠ SUMMARY OF DANGERS, WARNINGS AND CAUTIONS ..... 1 - 1

1.3.1 ⚠ DANGERS ..... 1 - 1

1.3.2 ⚠ WARNINGS ..... 1 - 1

1.3.3 ⚠ CAUTIONS ..... 1 - 2

1.4 ⚠ SAFETY DECALS ..... 1 - 3

1.5 ⚠ MACHINE FRONT ACCESS PANEL SAFETY SWITCH ..... 1 - 3

1.6 ♻ DISPOSING OF MACHINE FLUIDS ..... 1 - 3

SECTION 2: SPECIFICATIONS ..... 2 - 1

2.1 GENERAL INTRODUCTION ..... 2 - 1

TABLE 2A: SPECIFICATIONS FOR VIPER GASOLINE ROTARY SCREW COMPRESSOR ..... 2 - 1

Figure 2-1: Machine Main Component Locations ..... 2 - 2

TABLE 2B: CAPSCREW TIGHTENING TORQUE VALUES ..... 2 - 3

SECTION 3: INSTALLATION ..... 3 - 1

3.1 MACHINE PACKAGE RECEIPT/INSPECTION ..... 3 - 1

3.2 INSTALLATION INSTRUCTIONS ..... 3 - 1

Continued on next page...

SECTION 3: INSTALLATION (CONTINUED)

Figure 3-1: Installation and Dimensions Diagram ..... *3 - 2*

SECTION 4: OPERATION ..... 4 - 1

4.1 GENERAL INFORMATION ..... 4 - 1
4.2 INSTRUMENTATION ..... 4 - 1
4.2.1 IGNITION SWITCH ..... *4 - 1*
4.2.2 TEMPERATURE GAUGE ..... *4 - 1*
4.2.3 HOUR METER ..... *4 - 1*
4.2.4 PRESSURE GAUGE ..... *4 - 1*
4.2.5 FUNCTION OF THE UNLOAD CONDITION AT START-UP ..... *4 - 1*
4.3 START-UP PROCEDURE ..... 4 - 2
4.3.1 HIGH MOISTURE CONDITION: EMULSIFICATION OF OIL IN ROTARY SCREW COMPRESSOR SYSTEMS ..... *4 - 2*
4.3.1.1 PREVENTION OF EMULSIFICATION ..... 4 - 3
4.3.1.2 INFREQUENT USE ..... 4 - 3
4.3.2 EXTREME CONDITION MACHINE APPLICATIONS ..... *4 - 3*
4.4 SHUTDOWN PROCEDURE ..... 4 - 3
4.5 OPERATION GUIDELINES ..... 4 - 3
4.5.1 MACHINE ORIENTATION ..... *4 - 3*
4.5.2 ENCLOSURE INTACT ..... *4 - 3*
4.5.3 SAFETY / PROTECTION SHUTDOWN DEVICES ..... *4 - 3*
4.5.4 COOLING SYSTEM ..... *4 - 4*
4.5.5 LIFTING ..... *4 - 4*
4.5.6 COLD WEATHER OPTION ..... *4 - 4*
4.5.7 EXTREME CONDITIONS ..... *4 - 4*

SECTION 5: MAINTENANCE ..... 5 - 1

5.1 GENERAL INFORMATION ..... 5 - 1
5.2 ROUTINE MAINTENANCE SCHEDULE ..... 5 - 1

Continued on next page...

SECTION 5: MAINTENANCE (CONTINUED)

5.3 REPLACEMENT PARTS ..... 5 - 1
TABLE 5A: MAINTENANCE SCHEDULE TABLE - COMPRESSOR INTERVALS ..... 5 - 3
TABLE 5B: ROUTINE MAINTENANCE REPLACEMENT KITS - COMPRESSOR ..... 5 - 3
TABLE 5C: MAINTENANCE SCHEDULE TABLE - ENGINE INTERVALS ..... 5 - 6
TABLE 5D: ROUTINE MAINTENANCE REPLACEMENT KITS - ENGINE ..... 5 - 6
5.4 PARTS REPLACEMENT AND ADJUSTMENT PROCEDURES ..... 5 - 9
5.4.1 ADJUSTING THE BELT TENSION ..... 5 - 9
5.4.2 ENGINE SPEED ADJUSTMENT ..... 5 - 9
5.5 SERVICING THE SYSTEM FUSES AND CIRCUIT BREAKER ..... 5 - 9
5.6 TESTING THE GAUGES' SHUTDOWN FEATURE ..... 5 - 9
5.7 STORAGE AND INTERMITTENT USE ..... 5 - 10
5.7.1 INTERMITTENT USE ..... 5 - 10
5.7.2 LONG TERM STORAGE ..... 5 - 10

SECTION 6: TROUBLESHOOTING ..... 6 - 1

6.1 GENERAL INFORMATION ..... 6 - 1
6.2 TROUBLESHOOTING GUIDE ..... 6 - 2
6.3 EXTREME CONDITION OPERATION ..... 6 - 4
6.3.1 HIGH MOISTURE CONDITION: EMULSIFICATION OF OIL IN ROTARY SCREW COMPRESSOR SYSTEMS ..... 6 - 4
6.3.2 COLD WEATHER OPERATION ..... 6 - 4
6.3.3 HIGH TEMPERATURE OPERATION ..... 6 - 4
6.3.4 HIGH DUST CONTENT OPERATION ..... 6 - 5
6.3.5 HIGH ALTITUDE OPERATION ..... 6 - 5
6.4 ENGINE FAULT CODES ..... 6 - 5

SECTION 7: ILLUSTRATED PARTS LIST ..... 7 - 1

7.1 PARTS ORDERING INFORMATION ..... 7 - 1
TABLE 7A: RECOMMENDED SPARE PARTS LIST ..... 7 - 2
7.2 COMPRESSOR AND PARTS ..... 7 - 4

Continued on next page...

SECTION 7: ILLUSTRATED PARTS LIST (CONTINUED)

7.3 AIR END AND ATTACHMENTS ..... 7 - 6
7.4 ENGINE AND DRIVE PARTS ..... 7 - 8
7.5 FRAME AND CANOPY ..... 7 - 10
7.6 COOLING SYSTEM ..... 7 - 12
7.7 INSTRUMENT PANEL ..... 7 - 13
7.8 FUEL TANK AND PUMP ASSEMBLY ..... 7 - 14
7.9 ELECTRICAL SYSTEM ..... 7 - 16
7.10 WIRING DIAGRAM ..... 7 - 17
7.11 DECALS (1 OF 2) ..... 7 - 18
7.11 DECALS (2 OF 2) ..... 7 - 20
7.12 SCHEMATIC FLOW DIAGRAM WITH AIR CYLINDER ..... 7 - 22
7.13 HOSE INSTALLATION GUIDE ..... 7 - 24
TABLE 7B: MAINTENANCE TRACKING LOG ..... 7 - 25

WARRANTY CLAIMS PROCEDURE

CLAIMS PROCESS FOR WARRANTED VANAIR PARTS

This process must be used by owners of Vanair® equipment in situations where a warranted item needs repair or replacement under the terms of the purchase warranty. Do not return items to Vanair without prior authorization from the Vanair Warranty Administrator.

PROCEDURE:

When a customer needs assistance in troubleshooting a system and/or returning parts, follow the steps below.

1. **Locate the machine's serial number:**

   The machine package serial number plate is located inside the machine compartment on the wall of the enclosure near the compressor unit (see ***Figure W-1***).

   The engine and the compressor also have individual serial numbers respectively (see ***Figure W-1***). For engine warranty issues, consult the Engine Operator's Manual for the engine's limited warranty details. For particular compressor unit issues, the compressor serial number may be needed. In any case, engine and/or compressor issues can be confirmed using the machine serial number as found in ***Figure W-1***.

2. **Have a list of the symptoms/condition/ malfunctions along with any applicable temperature and pressure readings, and also the number of operational hours available:**

   Note that the above information will also need to be included on the Return Material Authorization Form (per Step #6); this form is necessary for warranty processing if the warranty claim is deemed valid by the service case review.

3. **Contact the Vanair Service Department by phone (1-219-879-5100) to speak with a Service Technician.**

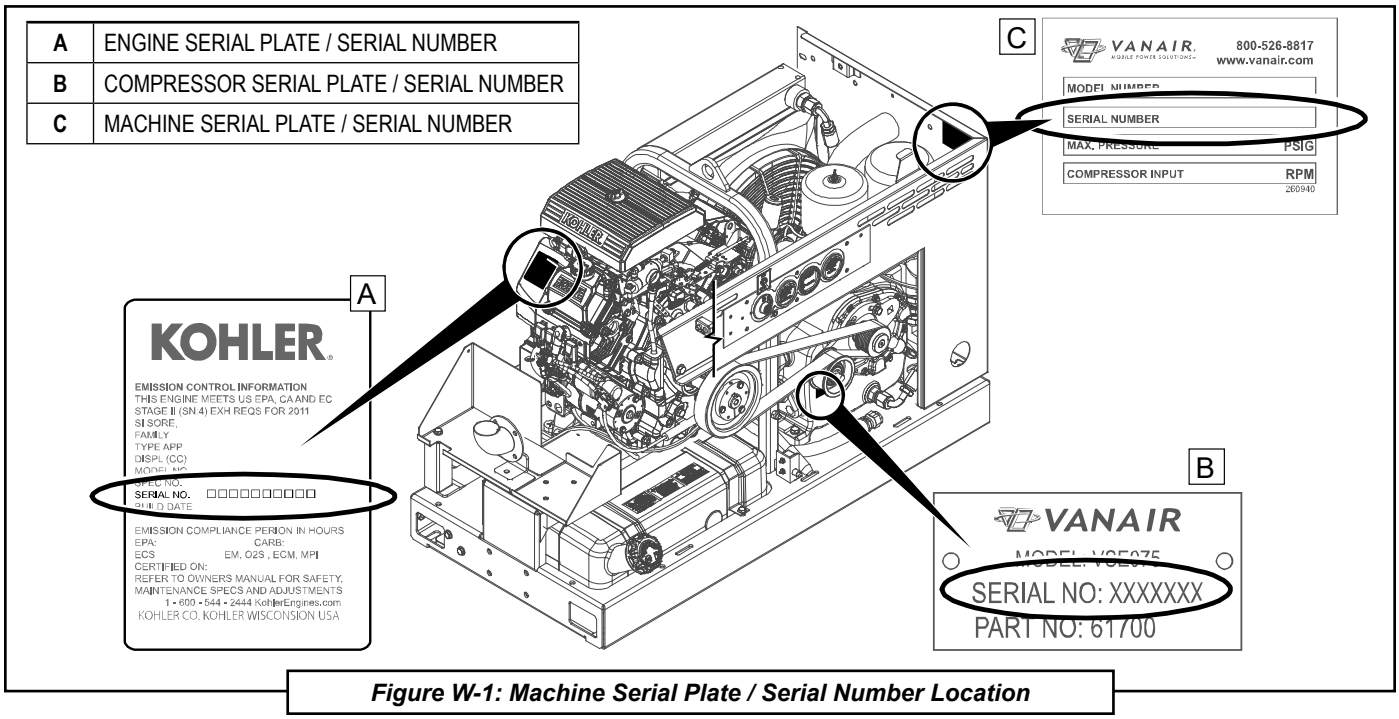

Figure W-1: Machine Serial Plate / Serial Number Location

4. **Vanair® Service will troubleshoot the problem based on the information provided by the customer, and attempt to return the unit to service as quickly as possible.**
5. **If the unit cannot be returned to service, and Vanair determines this matter is a warranty issue, the Service Technician will assign an RMA (Return Material Authorization) number that will provide for the return of the item to Vanair for analysis and a final determination as to the item's warranty status.**

NOTE

The RMA number must be placed on the outside of the package being returned.

6. **Warranty Claims are solicited via a Return Material Authorization (RMA) Form. This form can be obtained via download from the web site, or requested directly from the Vanair Service Department:**

   Once a current form has been obtained, follow the instructions given on the form to fill in the information needed. This form is used for the purpose of soliciting a warranty case. All of the field information except for the bottom section block fields, which includes Disposition of Goods, Notifications and Additional Notes, will be required.

   Customers have 30 days after the RMA number is issued to return the item. If the part is not returned within this period, the RMA is void and any claims will be denied.

NOTE

All labor claims or invoices must be approved by the Vanair Warranty Administrator prior to starting repair work along with the cost of the repair. All paper work associated with the returned item and warranty repair cost must reference the RMA number issued against the part, and be forwarded to Vanair within 30 days of the completion of work.

Before sending a warranty part to a customer, Vanair will need a P.O. or credit card number to cover the cost of the part and shipping. After the part is analyzed and deemed to be covered under warranty, Vanair will issue credit to the customer. All parts eligible for warranty must have the RMA number on the invoice at the time of purchase.

No items can be returned "freight collect". Freight costs will be addressed at the time the claim is closed. The customer pays any additional costs for warranty parts delivered through expedited services (i.e., Next Day, Second Day).

IMPORTANT

VANAIR WILL NEVER ACCEPT ANY INVOICES FOR PARTS RETURNED: ANY PARTS RETURNED VIA INVOICE WILL BE RETURNED FREIGHT COLLECT: NO PARTS ARE TO BE RETURNED FREIGHT COLLECT!

Vanair Mfg., Inc. strives to continuously improve its customer service. Please forward any questions, comments, or suggestions to Vanair Service:

Vanair Manufacturing, Inc.

10896 West 300 North

Michigan City, IN 46360

Telephone (toll free): (800) 526-8817

Service (toll free): (844) VAN-SERV

(844) 826-7378

Telephone: (219) 879-5100

Service Fax: (219) 879-5335

Parts Fax: (219) 879-5340

Sales Fax: (219) 879-5800

www.vanair.com

SECTION 1: ⚠ SAFETY

1.1 ⚠ GENERAL INFORMATION

IMPORTANT

Read this manual before operating or servicing the Viper Gas compressor system. Failure to do could result in damage equipment, bodily injury, or death.

The products provided by Vanair® Manufacturing, Inc., are designed and manufactured for safe operation and maintenance. But it is ultimately the responsibility of the users and maintainers for safe use of this equipment. Part of this responsibility is to read and be familiar with the contents of this manual before operation or performing maintenance actions.

1.2 ⚠ DANGERS, WARNINGS, CAUTIONS AND NOTES

These boxes are labeled clearly with the title block listing either Danger, Warning, Caution, or other non-safety issue. They draw attention to specific issues that are pertinent to the safe and correct operation of the machine.

The symbols shown and defined in Section 1: Safety are used throughout this manual and on the machine to call attention to, and identify, possible hazards.

The international warning symbol [⚠] is used on all decals, labels and signs that concern information pertaining to bodily harm. When you see the international warning symbol, pay extremely careful attention, and follow the given instructions or indications to avoid any possible hazard.

1.3 ⚠ SUMMARY OF DANGERS, WARNINGS AND CAUTIONS

These boxed inserts are placed throughout this manual in the sections where they apply. This subsection is a general summary of their contents.

1.3.1 ⚠ DANGERS

- Keep tools or other conductive objects away from live electrical parts.
- Never touch electrical wires or components while the machine is operating. They can be sources of electrical shock.

1.3.2 ⚠ WARNINGS

- **DO NOT** EVER use this compressor as a breathing air source. Vanair Manufacturing Inc., disclaims any and all liabilities for damage or loss due to fatalities, personal injuries resulting from the use of a Vanair compressor to supply breathing air.
- **DO NOT** perform any modifications to this equipment without prior factory approval.
- **DO NOT** install this compressor in a confined space that lacks proper ventilation and airflow; breathing and cooling air circulation must not be compromised.
- **DO NOT** operate the compressor or any of its systems if there is a known unsafe condition. Disable the equipment by disconnecting it from its power source. Install a lock-out tag to identify the equipment as inoperable to other personnel.
- **DO NOT** operate the compressor with any bypass or other safety systems disconnected or rendered inoperative.
- **DO NOT** operate the equipment while you are under the influence of alcohol or drugs.
- **DO NOT** operate the equipment while you are feeling ill.
- **DO NOT** attempt to service the equipment while it is operating.
- Before performing maintenance or replacing parts, relieve the entire system pressure by opening a service valve which will vent all pressure to the atmosphere: remove all elec-

trical power.

- **DO NOT** use the compressor for purposes other than for which it is intended. High pressure air can cause serious and even fatal injuries.
- **DO NOT** operate the compressor outside of its specified pressure and speed ratings. (See Section 2: Specifications or refer to the equipment data plate.)
- **DO NOT** use flammable solvents or cleaners for cleaning the compressor or it parts.
- **DO NOT** operate the compressor in areas where flammable, toxic, or corrosive fumes, or other damaging substance can be ingested by the compressor intakes.
- Keep arms, hands, hair and other body parts, and clothing away from fans, drive shafts, and other moving parts.
- **DO NOT** wear jewelry, unbuttoned cuffs, ties, or loose-fitting clothing when you are working near moving/rotating parts.
- **ALWAYS** confine long hair when working near moving/rotating parts.
- **NEVER** operate the equipment while wearing a headset to listen to music or the radio.
- Wear personal protective equipment such as gloves, work shoes, and eye and hearing protection as required for the task at hand.
- **DO NOT** operate the compressor with any guards removed or damaged, or other safety devices inoperative.
- **DO NOT** operate the compressor in enclosed or confined spaces where ventilation is restricted or closed-off.
- Ensure that hoses connected to service valves are fitted with correctly sized and rated flow limiting devices which comply with applicable codes. Pressurized broken or disconnected hoses can whip causing injuries or damage.
- Over speed is hazardous! **NEVER** tamper with the governor components or settings to increase the maximum speed. Severe personal injury and equipment damage can result if operated at speeds above the maximum.
- **DO NOT** use tools, hoses, or equipment that have maximum ratings below that of this compressor.
- Keep metal tools, and other conductive objects away from live electrical components.
- Before performing maintenance or repair operations on the compressor, ensure that all power has been removed and been locked out to prevent accidental application.
- **DO NOT** assume that because the compressor is in a STOPPED condition that power has been removed.
- Use this compressor only to compress atmospheric air. Use of this equipment as a booster pump and/or to compress any other gaseous or aerosol substance constitutes improper use. It can also cause damage or injuries. Such misuse will also void the warranty.
- Install, operate, and maintain this equipment in full compliance with all applicable OSHA, other Federal, state, local codes, standards, and regulations.
- When lifting objects, be aware of proper lifting techniques to avoid injury.
- **ALWAYS** read and follow safety related precautions found on containers of hazardous substances.
- **DO NOT** play with compressed air. It can cause serious injury.

1.3.3 ⚠ CAUTIONS

- Check all safety devices for proper operation on a routine basis.
- Ensure that no tools, rags, or other objects are left on compressor drive systems or near intakes.
- Keep the equipment clean when performing maintenance or service actions. Cover openings to prevent contamination.
- **DO NOT** operate the compressor if cooling air is not available (fan/cooler not operating) or if lubricant levels are below their specified minimum levels.
- Ensure all plugs, hoses, connectors, covers, and other parts removed for maintenance actions are replaced before applying power to the compressor.
- Avoid touching hot surfaces and components.
- Ensure that electrical wiring, terminals; hoses

and fittings are kept in serviceable condition through routine inspections and maintenance. Replace any damaged or worn components.

- **DO NOT** install safety devices and/or replacement parts other than authorized Vanair® replacement parts.
- Keep personnel out of line with, and away from discharge opening of valves, hoses and tools.
- Immediately clean up any lubricant or spills.

1.4 ⚠ SAFETY DECALS

Safety decals are placed onto, or located near, system components that can present a hazard to operators or service personnel. All pertinent decals listed in **Section 7.11, Decals** are located near a component, which is subject to respect in terms of safety precautions. Always heed the information noted on the safety decals.

⚠ WARNING

DO NOT REMOVE OR COVER ANY SAFETY DECAL. Replace any safety decal that becomes damaged or illegible.

1.5 ⚠ MACHINE FRONT ACCESS PANEL SAFETY SWITCH

Consult ***Figure 1-1***. The Viper Gas package is equipped with a front access panel safety switch, which will either shut down, or not allow the machine to start, if the front access door is bridged.

⚠ CAUTION

The front access panel safety switch may be bypassed in order to observe the machine in operation for diagnostic purposes.

NOTE

If the front access panel is opened prior to operation, the machine will crank, but will not start.

If the front access panel is opened while the machine is running, the machine will shut down.

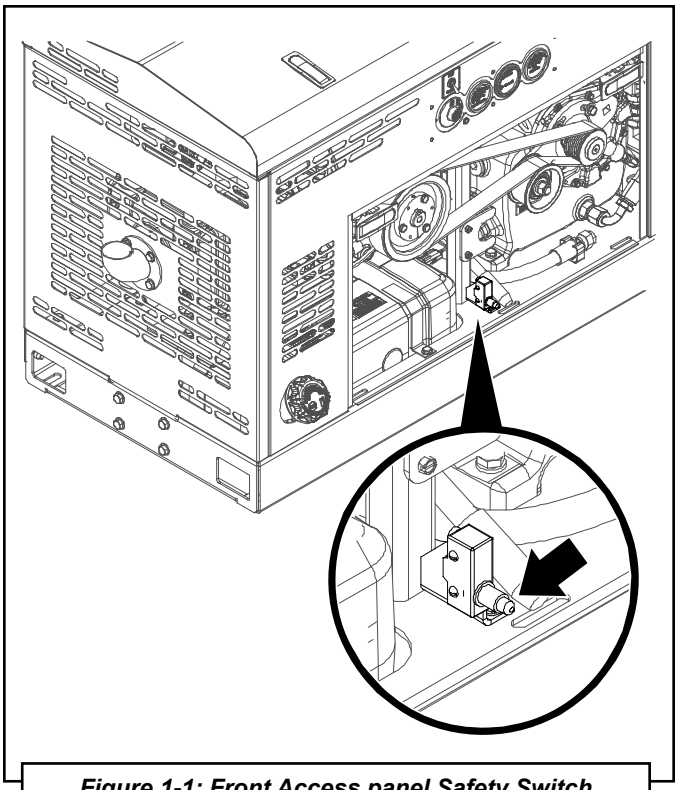

Figure 1-1: Front Access panel Safety Switch

1.6 ♻ DISPOSING OF MACHINE FLUIDS

Always dispose of machine fluids under the guidance of all applicable local, regional and/or federal law.

Vanair® encourages recycling when allowed. For additional information, consult the container label of the fluid in question.

BLANK PAGE

SECTION 2: SPECIFICATIONS

2.1 GENERAL INTRODUCTION

The tables and figures in this section list the specifications (including operational, output and dimensional) of the overall machine. Contact the Vanair® Service Department if additional specifications are needed that cannot be found in this manual.

Refer to ***Figure 2-1*** for general machine component locations. For additional information, including measurement specifications, refer to ***Figure 3-1*** (machine and identification and dimensions) in **Section 3, Installation**.

TABLE 2A: SPECIFICATIONS FOR VIPER GASOLINE ROTARY SCREW COMPRESSOR

GENERAL SYSTEM INFORMATION	SPECIFICATION	
ENGINE	**23 HP or 26.5 HP, EFI**	
Engine Speed:	Idle Speed: 2500 RPM // Full Speed: 3600 RPM	
Engine Oil Capacity:	Two (2) Quarts (Refer to Engine Operation Manual for proper oil type)	
Fuel Consumption:	Two (2) GPH at Full Engine Speed / Load	
Fuel Tank Capacity:	Five (5) Gallons	
Fuel Type:	Gasoline [I]	
Operating Temperature Limits:	+10°F (-7°C) to 120°F (49°C) [II]	
COMPRESSOR	**Single Stage, Oil Injected Rotary Screw**	**Altitude Rating**
Model:	80 CFM / 100 PSIG	3,500 ft
	70 CFM / 100 PSIG	5,500 ft
	60 CFM / 150 PSIG	8,500 ft
	High Altitude: 70 CFM / 100 PSIG	11,000 ft
Inlet Control:	Pneumatic	
Air Filter:	Pleated Paper, Dry Type	
Oil Filter:	Spin-on Style	
Oil Capacity / Type:	Air End - **2 Quarts** // Machine - **4 Quarts** (1 gallon) (Vanguard™ Premium Synthetic Oil)	
Safety Relief Valve Setting:	200 PSIG	
Electrical System:	12 VDC or 24 VDC	
Cooling System:	Air to Oil Heat Exchanger	
Instrumentation Display:	Run Hours, Compressor Temperature, Discharge Pressure	

[I] For specification and requirements regarding the Kohler® Gasoline Engine, refer to the Engine Operation Manual.

IMPORTANT: Do not adjust the engine speed without first consulting the Vanair® Service Department.

[II] With cold weather option kit temperature range expands to: -40 °F (-40 °C). Order cold weather option kit **no. 032983**.

NOTE: Refer to ***Figure 2-1*** for main component locations.

NOTE: Specifications are subject to change without notice.

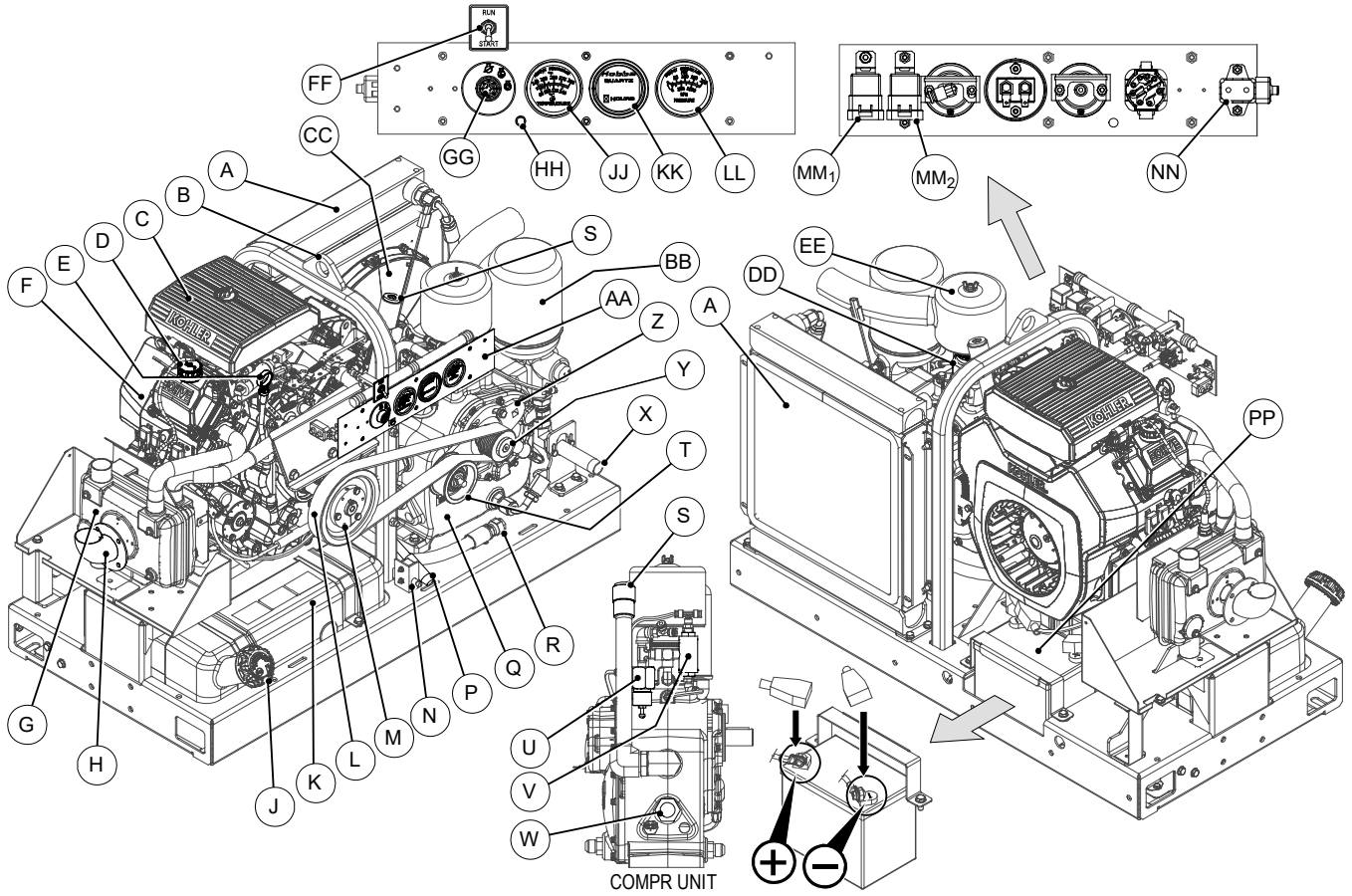

KEY	DESCRIPTION	KEY	DESCRIPTION
A	COOLER	W	COMPRESSOR OIL LEVEL SIGHT GLASS
B	LIFTING BAIL	X	SERVICE AIR OUT
C	ENGINE AIR FILTER HOUSING	Y	COMPRESSOR DRIVE SHEAVE
D	ENGINE OIL FILL PORT / CAP	Z	DRIVE BELT TENSIONER (idler sheave adjustment)
E	ENGINE OIL DIPSTICK / LEVEL GAUGE	AA	INSTRUMENT PANEL
F	ENGINE	BB	COMPRESSOR AIR / OIL SEPARATOR COALESCER
G	ENGINE MUFFLER	CC	COOLER FAN
H	MUFFLER OUT PIPE (outside canopy)	DD	COMPRESSOR AIR INLET VALVE
J	ENGINE FUEL FILL PORT	EE	COMPRESSOR AIR FILTER HOUSING
K	FUEL TANK	FF	RUN/START TOGGLE SWITCH
L	DRIVE BELT	GG	IGNITION SWITCH
M	ENGINE DRIVE SHEAVE	HH	ENGINE FAULT INDICATION (red lamp)
N	ACCESS PANEL SAFETY SWITCH	JJ	COMPRESSOR TEMPERATURE GAUGE / HIGH TEMPERATURE SHUTDOWN SWITCH
P	ENGINE OIL DRAIN TUBE	KK	HOUR METER
Q	COMPRESSOR UNIT	LL	COMPRESSOR PRESSURE GAUGE / HIGH PRESSURE SHUTDOWN SWITCH
R	COMPRESSOR OIL DRAIN TUBE	MM_1	RELAY - OIL PRESSURE
S	COMPRESSOR OIL FILL PORT	MM_2	RELAY - FAN
T	COMPRESSOR DRIVE SHEAVE	NN	BREAKER - 40A CIRCUIT, WITH STUDS
U	REGULATOR VALVE	PP	BATTERY
V	BLOWDOWN VALVE		

Figure 2-1: Machine Main Component Locations

TABLE 2B: CAPSCREW TIGHTENING TORQUE VALUES

SIZE	GRADE	LUBRICATED
1/4 - 20 UNC	5	6 ft-bs
5/16 - 18 UNC	5	13 ft-lbs
3/8 - 16 UNC	5	23 ft-lbs
1/2 - 13 UNC	5	55 ft-lbs
3/4 - 10 UNC	5	200 ft-lbs

BLANK PAGE

SECTION 3: INSTALLATION

3.1 MACHINE PACKAGE RECEIPT/INSPECTION

Upon receipt of the machine package, inspect the exterior of the shipping crate for signs of shipping/transit damage. Any damage should be reported immediately to the shipping company. Open the lid and inspect the component parts and supports to ensure that there has been no internal movements of assemblies or components which may have caused damage. To install the Viper Gas Compressor System, refer to the following sections.

To report missing items, incorrect part numbers, or other discrepancies, contact Vanair® at:

Vanair Manufacturing, Inc.
10896 West 300 North
Michigan City, IN 46360
Telephone (toll free): (800) 526-8817
Service (toll free): (844) VAN-SERV
(844) 826-7378
Telephone: (219) 879-5100
Service Fax: (219) 879-5335
www.vanair.com

3.2 INSTALLATION INSTRUCTIONS

⚠ DANGER

DO NOT install in enclosed spaces.

⚠ WARNING

ELECTRICAL HAZARD! Be sure the battery is disconnected before starting the installation.

IMPORTANT

DO NOT install in an enclosed space. 2500 CFM is required for cooling; ensure there is no recirculation of hot air from the machine returning to the cool air intakes.

NOTE

In order to prevent accidental damage to vehicle components (fuel tanks, lines, brake lines, wiring harnesses), note their location before drilling any holes.

Refer to ***Figure 3-1*** (***Parts 1 and 2***), and the following procedure:

1. Position the machine so that there is no restriction of cooling air through the enclosure a minimum of eight (8) inches from front access side; minimum of eight (8) inches from rear side, and twelve (12”) from the left side. Cooling air enters the enclosure through the rear panel, passes through the cooler, and exits through vents in the front and left sides. **NOTE: Air circulation from hot air exhaust must be prevented from heating cooling air circulation.**
2. Ensure that adequate height and clearance exists to allow for the hood to open (minimum of 46 inches from mounting surface), and a clear passage for service allowance to the maintenance access panel located at the front and back.
3. Mounting surface or support should be adequate for the weight of the machine and should be level for normal operation. Mounting holes for four (4) 1/2” hold down bolts are provided. Refer to **Section 7, Illustrations and Parts Lists** for additional installation and system schematic drawings.
4. Electrical connections (system designed for 12VDC negative ground).

Ensure all supply hoses and electrical wiring are correctly specified, adequately supported and do not touch or rest on any sharp edges. Wiring should be protected with split loom to prevent corrosion.

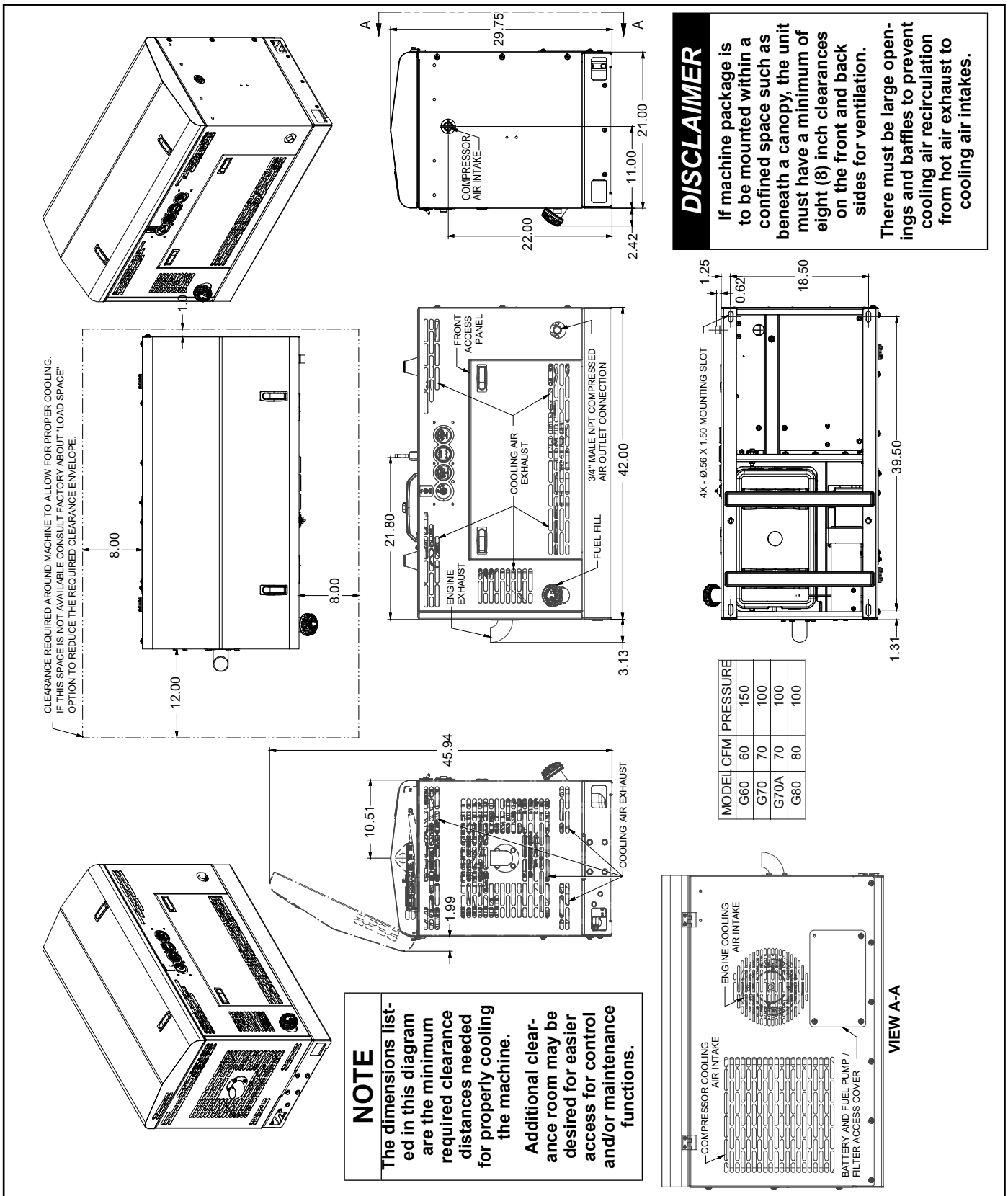

MODEL	CFM	PRESSURE
G60	60	150
G70	70	100
G70A	70	100
G80	80	100

DISCLAIMER

If machine package is to be mounted within a confined space such as beneath a canopy, the unit must have a minimum of eight (8) inch clearances on the front and back sides for ventilation.

There must be large openings and baffles to prevent cooling air recirculation from hot air exhaust to cooling air intakes.

NOTE

The dimensions listed in this diagram are the minimum required clearance distances needed for properly cooling the machine.

Additional clearance room may be desired for easier access for control and/or maintenance functions.

Figure 3-1: Installation and Dimensions Diagram

051257-001_r1

SECTION 4: OPERATION

4.1 GENERAL INFORMATION

The Vanair® Viper Gas compressor is very simple to operate. Controls are automatic and require no user interface. The engine is electronically fuel-injected for easy starting, especially in cold weather. There is no choke involved in starting the machine; the user starts the engine, and the compressor will regulate the engine speed (either full speed or idle) based on compressed air demand.

When compressed air is being demanded the compressor controls will modulate the inlet valve opening, matching output to demand.

IMPORTANT

Before starting the Vanair Viper Gas compressor, read this section thoroughly and familiarize yourself with the controls and indicators - their purpose, location and use.

NOTE

If start-up and shut-down procedures are not followed, damage to the system and its components may occur.

4.2 INSTRUMENTATION

Refer to ***Figure 4-1***. The instrument panel will provide the operator with feedback on operating pressure, temperature and run time hours.

4.2.1 IGNITION SWITCH

The keyed ignition switch is used to start and stop the compressor. It has three positions: OFF, RUN and START.

4.2.2 TEMPERATURE GAUGE

The temperature gauge has two functions. It monitors and displays the current temperature of the compressor fluid, and it also acts as a safety shutdown if the fluid temperature exceeds its maximum. The shutdown point is 240°F, and is preset from the factory. This set point should be checked periodically to ensure that it remains set at the proper shutdown point.

4.2.3 HOUR METER

The Viper Gas is equipped with an hour meter to accurately log run time hours so that machine operation and service intervals can adhere to the maintenance schedule.

4.2.4 PRESSURE GAUGE

The pressure gauge has two functions. It monitors and displays the current line pressure of compressed air available to the user, and it also acts as a safety shutdown if the pressure exceeds the shutdown setting. The shutdown point can be lowered by the user if desired, but should not be set lower than 15 PSIG above the rated pressure of the model to avoid nuisance shutdowns. The shutdown point should not be set above 175 PSIG.

4.2.5 FUNCTION OF THE UNLOAD CONDITION AT START-UP

When starting the Vanair Gas Viper it is highly recommended that the compressor attains an unloaded state. When the compressor is in an unload condition, the inlet of the compressor is held closed, which in turn does not allow the compressor to begin compressing air. The unloaded state will greatly reduce the required horse power to start the engine allowing it to start easier especially at initial startup or in cold weather. Vanair's Gas Viper comes with an unload circuit as a standard feature and is controlled by a toggle switch mounted above the key switch.

To utilize the unload feature place the toggle switch on the control panel in the (down) "START" position and turn the key switch to start the engine. Allow the engine to warm up for a few moments until the engine is running smoothly. Then,

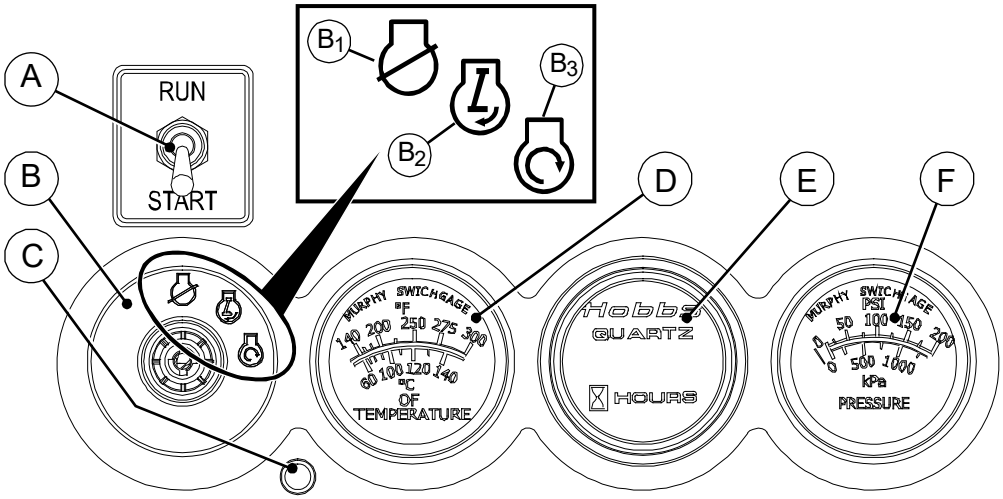

KEY	DESCRIPTION	KEY	DESCRIPTION
A	RUN/START TOGGLE SWITCH	C	ENGINE FAULT INDICATION (red lamp)
B	IGNITION SWITCH	D	COMPRESSOR TEMERPATURE GAUGE / HIGH TEMPERATURE SHUTDOWN SWITCH
B_1	OFF	E	HOUR METER
B_2	RUN	F	COMPRESSOR PRESSURE GAUGE / HIGH PRESSURE SHUTDOWN SWITCH
B_3	START		

Figure 4-1: Controller Panel

to allow the compressor to begin compressing air, put the toggle switch in the up “RUN” position. This will allow the compressor to load and deliver air.

At the end of use before shutting the engine off, place the toggle switch into the “START” position to allow the system to unload, reducing horsepower load against the engine, and let the engine run at idle for a few minutes. Then place the keys witch into the "OFF" position.

4.3 START-UP PROCEDURE

The following procedure should be used to make the initial start-up of the compressor.

1. Position the compressor on a level surface so that proper amounts of liquid can be added, if required.
2. Check engine and compressor oil levels and add oil, if necessary.
3. Fill fuel tank.
4. Connect air hose/piping to discharge.
5. Close service valve.
6. Ensure toggle switch is placed in the down (START) position.
7. Start the engine using the key switch.
8. Allow engine to warm up for a few moments until the engine idles smoothly.
9. Place toggle switch in the up (RUN) position to start using compressed air.

4.3.1 HIGH MOISTURE CONDITION: EMULSIFICATION OF OIL IN ROTARY SCREW COMPRESSOR SYSTEMS

A serious condition may occur in operating environments that contain high levels of moisture, whereby condensation can occur within the oil system, and possibly lead to emulsification of the lubricant. Emulsification occurs when the system’s oil absorbs moisture present in the operation system via condensation.

If the condition persists, consider changing to a different type of lubricant (consult supplier).

Consult the information in **Section 4.3.1.1** and ***Section 6.3.1*** for preventative and corrective actions necessary to take for high moisture ambient environment operation.

4.3.1.1 PREVENTION OF EMULSIFICATION

1. Start the machine normally.
2. Do not immediately engage service air when full load is reached; allow the system to first warm up to180°F. This warm-up period allows the moisture within the system to vaporize.
3. After temperature reaches 180°F, open service valve and discharge air for approximately ten (10) minutes to purge the system of moisture vapor.

4.3.1.2 INFREQUENT USE

In some installations the compressor may not be regularly used. In order to ensure the compressor system is maintained in working order, the compressor should be started and run at least once per month. Follow the procedure outlined in **Section 4.3.1.1** on a once per month basis.

Be sure to follow all fluid and filter maintenance as outlined in this manual following the recommended change intervals. In cases whereby the machine is scheduled to be idle for long periods of time, consult **Section 5.7, Storage and Intermittent Use** for long idle preparation.

4.3.2 EXTREME CONDITION MACHINE APPLICATIONS

When operating in extreme hot or cold conditions, extra attention should be given to any indications that could lead to a serious problem. Machine review and maintenance check schedules should be more frequent than the normal suggestions given in **Section 5**, **Tables 5A** through **5D** (Routine Maintenance Schedules for Engine and Compressor, respectively).

For additional information concerning extreme operating conditions and steps to take to optimize machine performance, refer to **Section 6.3, Extreme Condition Operation**, in **Section 6, Troubleshooting**.

4.4 SHUTDOWN PROCEDURE

1. Close service valve to stop the demand for compressed air.
2. Place toggle switch into the down/START position.
3. Allow engine to run at idle for a few minutes to cool down.
4. Turn the key switch to the OFF position.

4.5 OPERATION GUIDELINES

4.5.1 MACHINE ORIENTATION

The Viper Gas should only be operated on a level surface. Operation in a non-level orientation could result in improper fuel system venting, oil carryover in the compressed air supply, and/or vibrational issues.

4.5.2 ENCLOSURE INTACT

The Viper Gas should only be operated with the hood closed, and the front and back access covers in place. The cooling system is designed to function properly only with the enclosure intact and closed.

4.5.3 SAFETY/PROTECTIVE SHUTDOWN DEVICES

- **Compressor Over Pressure -** The pressure gauge on the instrument panel is equipped with a settable shutdown switch. It is extremely important to keep the pressure gauge in good operating condition and the shutdown point set properly. If the gauge should ever malfunction it is imperative to replace it to protect the equipment as well as for personnel safety.
- **Compressor Over Temperature -** The temperature gauge on the instrument panel is equipped with a settable shutdown switch. It is extremely important to keep the temperature gauge in good operating condition and the shutdown point set properly. If the gauge should ever malfunction it is imperative to replace it to protect the equipment as well as for personnel safety.
- **Engine Oil Pressure -**The engine is equipped

with an oil pressure monitor that will shut down the engine if a minimum pressure is not maintained. No user interface is required.

- **Engine Over Temperature -** The engine is equipped with an oil temperature monitor that will shut down the engine if the maximum oil temperature is exceeded. No user interface is required.
- **Front access panel safety switch -** The front panel is equipped with a switch that will prevent the engine from starting or running if the panel is not in place. The belt and pulleys are fully exposed when the panel is removed and would present an unsafe operating condition if the panel were removed while machine is in use.

NOTE

There is also an emergency contact method whereby the machine can be incapacitated via a breach between the contact post/button and the bezel rim for either the temperature or the pressure gauge. Refer to Section 5.6 for details, including test procedure.

4.5.4 COOLING SYSTEM

The Viper Gas cooling system consists of an integral engine cooling fan for air/air engine cooling and a compressor cooler and fan for air/oil cooling of the compressor fluid. Follow the guidelines for recommended air space allowance around the machine to avoid preheating the intake air and/or recirculating of exhaust air back to the intake openings. Intake openings and the compressor cooler need to be free of obstructions, dirt, build-up, etc. to keep from reducing the efficiency of the cooling system. The Viper Gas is equipped with a thermostat that will turn the compressor cooling fan on even when the machine is not in operation if the ambient temperature inside the enclosure is elevated. This is designed to keep components and enclosure surfaces from experiencing elevated temperatures during “heat soak” immediately after the machine has been turned off and will usually only be apparent when high ambient operating conditions are present.

4.5.5 LIFTING

The Viper Gas is equipped with a single point lifting device. The lifting device is sufficient for supporting the weight of the machine ONLY. The lifting device is designed to support the weight of the machine in a vertical direction ONLY. Moving the machine in a horizontal direction resulting in a swinging motion should be prohibited and could cause the lifting device to fail resulting in damage to the equipment and pose a significant safety hazard to personnel.

4.5.6 COLD WEATHER OPTION

A kit is available for machine operation in cold weather (kit **no. 032983**). Consult ***Section 6.3.2*** for cold weather operation information.

4.5.7 EXTREME CONDITIONS

When operating in the presence of high humidity, in extreme cold or hot conditions, or at a high altitude, extra attention should be given to any indication that could lead to a serious problem. Preventative safeguards exist that can minimize the possibility of malfunctions that are prone to occur under certain ambient conditions. Refer to **Section 6.3, Extreme Condition Operation**, for additional information on variable ambient operating conditions, and adjustment adaptations that can be made accordingly.

SECTION 5: MAINTENANCE

5.1 GENERAL INFORMATION

A strict maintenance program is the key to long life for the Viper Series Compressor System package. Below is a program that, when adhered to, should keep the package in top operating condition.

Refer to **Tables 5A** through **Table 5D**, and **Section 5.4, Parts Replacement and Adjustment Procedures** for detailed descriptions of specific compressor system components. Refer to **Table 7A: Recommended Spare Parts List**, in **Section 7** for part order information.

⚠ WARNING

To avoid accidental system start-ups during periods of maintenance, disconnect the positive (+) cable to the battery terminal, and place the wire aside, or tape the contact end so that it cannot accidentally contact the battery post.

NOTE

Operating the machine package in a severe environment requires more frequent service intervals.

5.2 ROUTINE MAINTENANCE SCHEDULE

Vanair® Manufacturing, Inc. considers the maintenance schedule given in **Table 5A** and **Table 5B** (for compressor schedule), and **Table 5C** and **Table 5D** (for engine schedule), to be part of the warranty agreement with the customer. This maintenance regimen must be followed in order to protect the warranty of the machine package.

⚠ WARNING

Wear personal protective equipment such as gloves, work boots, and eye and hearing protection as required for the task at hand.

⚠ WARNING

DO NOT remove caps, plugs and/or other components when compressor is running or pressurized. Stop compressor and de-pressurize system prior to maintenance of system. Relieve the entire system pressure by opening the air tank drain/vent valve, if equipped, which will vent all pressure to the atmosphere.

NOTE

Follow the prescribed periodic maintenance (PM) schedule as recommended. Perform the required PM schedule at recommended intervals. Failure to follow this prescribed periodic maintenance at the recommended intervals will impair the package safety, performance characteristics, shorten the package's life, and will negatively affect the warranty coverage of the package.

Vanair Manufacturing, Inc. requires that a consistent service regimen be established for engine oil changes, and engine and compressor air filter servicing. The following schedule is designed so that many of the other maintenance tasks are completed when the engine and compressor air filters are serviced, and the engine oil is changed.

⚠ WARNING

Follow all applicable safety recommendations as outlined in *Section 1: Safety* of this manual.

Please take a moment to acquaint yourself with the service schedule presented in **Table 5A** for compressor, and **Table 5C** for engine, to assist the customer in establishing a maintenance routine log.

For assistance in obtaining routine maintenance or replacement parts, consult **Section 7.1, Parts Ordering Procedure**, and **Table 7A: Recommended Spare Parts List**.

5.3 REPLACEMENT PARTS

Replacement parts should be purchased through

your local Vanair® representative or where the Viper Gas Air Compressor System was purchased. If, for any reason, parts are not available in this manner, they can be purchased through Vanair directly.

NOTE

For assistance when ordering new replacement parts, consult Section 7.1, Parts Ordering Procedure, and Table 7A: Recommended Spare Parts List.

NOTE

If additional spare parts are being stored for future use, make certain that they are stored in proper containers that allow for protection against contamination, and kept in a clean area of moderate temperature reading. For information on storing the machine package for periods of non-use, consult Section 5.7.2, Long Term Storage.

VANAIR MANUFACTURING, INC.

10896 West 300 North

Michigan City, IN 46360

Telephone: (219) 879-5100

Toll Free: (844) VAN-SERV [826-7378]

Service Fax: (219) 879-5335

Parts Fax: (219) 879-5340

Sales Fax: (219) 879-5800

www.vanair.com

TABLE 5A: MAINTENANCE SCHEDULE TABLE - COMPRESSOR INTERVALS

⚠ WARNING

Before performing maintenance:

Shut down machine, relieve all system pressure and lock out all power, as per the Safety Section of this manual.

Always clearly tag the start-up instrumentation against accidental system start-ups during maintenance.

INTERVALS - Refer to **IMPORTANT** under **Table 5B**

KEY	TASK DESCRIPTION	BREAK-IN PERIOD First 50 Hours	DAILY	Every 100 Hours	Every 500 Hours or One (1) year	Every 1000 Hours or Two (2) years	ACTION TO TAKE / REFERENCE
1	Check oil level (confirm machine rests on level surface)	■	■				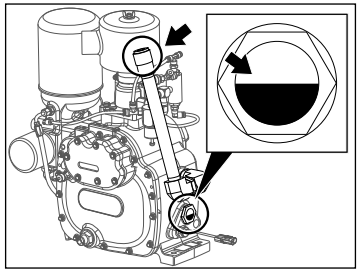 **REFERENCE:** • Oil fill port [⬋] • Oil sight glass [⬊] **PROCEDURE:** Add oil as necessary at the oil fill port, but take caution to fill slowly in order to avoid overfill. Top off level is equal to the center of the sight glass. **DO NOT** overfill; **DO NOT** mix different oil types.
2	Check line fittings and electrical connections	■	■				Ensure that all connections and fittings, including tubing and electrical connections, are snugly fastened without being twisted or compromised by extreme bending or contact with sharp corners or surfaces. Zip-tie any loose length of fitting if it appears to have a tendency to shift or cause wear while machine is in operation.
3	System inspection		■				Visually review the entire machine being mindful of any evidence of abnormal wear, including pooled oil, frayed or rubbed connection piping, loose fasteners or hardware, leaks, etc.
4	Change compressor oil and filter	■			■		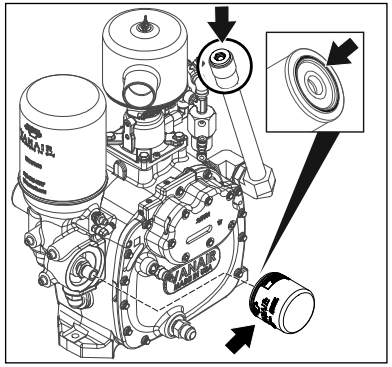 **REFERENCE:** • Oil fill port [⬇] • Oil filter [⬈] • Oil filter seal [⬋] **PROCEDURE:** Order the First 50 hour, or 500 hour replacement kits (Refer to **Table 5B** for reorder number). Replace the compressor filter and oil at the first 50, and at every 500 hour interval. *...continued next page...*

TABLE 5B: ROUTINE MAINTENANCE REPLACEMENT KITS - COMPRESSOR

KEY NO.	DESCRIPTION	QTY
KIT1212	Compressor First 50 Hour Maintenance (Vanguard Oil [1 gal], Oil Filter)	1
KIT1221	Compressor 500 Hour Maintenance (Vanguard Oil [1 gal], Oil Filter, Air Filter)	1[I]

[I] For 1000 hour maintenance, order separator element **no. 273080** In addition to this kit.

NOTE: Refer to **Section 7, Table 7A** for kit content item identificaiton, and additional replacement parts items.

IMPORTANT: If working in dusty or dirty conditions, reduce the recommended time intervals between servicing by half for engine and compressor oil change, and engine and compressor filter servicing.

Continued on next page

TABLE 5A: MAINTENANCE SCHEDULE TABLE - COMPRESSOR INTERVALS

⚠ WARNING

Before performing maintenance:

Shut down machine, relieve all system pressure and lock out all power, as per the Safety Section of this manual.

Always clearly tag the start-up instrumentation against accidental system start-ups during maintenance.

INTERVALS - Refer to **IMPORTANT** under **Table 5B**

KEY	TASK DESCRIPTION	BREAK-IN PERIOD First 50 Hours	DAILY	Every 100 Hours	Every 500 Hours or One (1) year	Every 1000 Hours or Two (2) years	ACTION TO TAKE / REFERENCE
4	Change compressor oil and filter (continued)	■			■		*...continued from previous page...* **NOTE** Coat element sealing ring on oil filter element with a film of compressor oil before securing in place, to assure a complete seal.
5	Change air filter element (inspect every 100 hours)			■			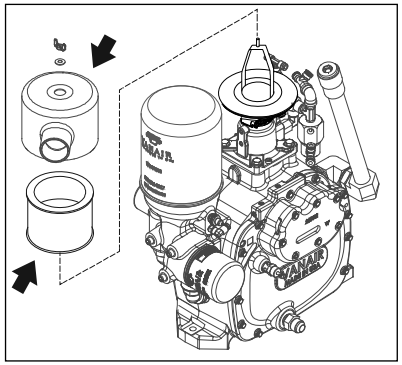 **REFERENCE:** • Air filter housing [⬋] • Air filter [⬈] **PROCEDURE:** Order air filter replacement element **no. 265546-004**. Note that the 500 hour kit also includes an air filter replacement element.
6	Clean cooler (inspect every 100 hours)				■		Use low pressure wash down on exterior.
7	Change separator element					■	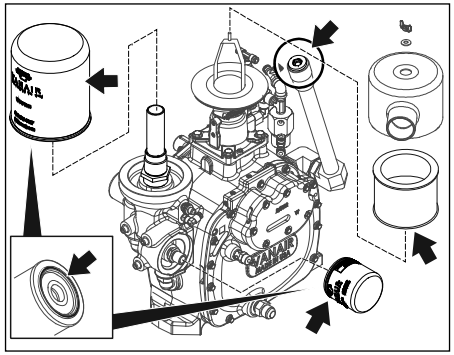 **REFERENCE:** • Separator element filter [⬅] • Oil filter [⬈] • Oil filter seal [⬋] • Air filter [⬉] **PROCEDURE:** Order separator/coalescer replacement element **no. 273080**, together with compressor 500 hour kit **no. KIT1221**. *...continued next page...*

Continued on next page

TABLE 5B: ROUTINE MAINTENANCE REPLACEMENT KITS - COMPRESSOR

KEY NO.	DESCRIPTION	QTY
KIT1212	Compressor First 50 Hour Maintenance (Vanguard Oil [1 gal], Oil Filter)	1
KIT1221	Compressor 500 Hour Maintenance (Vanguard Oil [1 gal], Oil Filter, Air Filter)	1[I]

[I] For 1000 hour maintenance, order separator element **no. 273080** In addition to this kit.

NOTE: Refer to **Section 7, Table 7A** for kit content item identificaiton, and additional replacement parts items.

IMPORTANT: If working in dusty or dirty conditions, reduce the recommended time intervals between servicing by half for engine and compressor oil change, and engine and compressor filter servicing.

VANAIR MANUFACTURING, INC.
(844) VAN-SERV • www.vanair.com

TABLE 5A: MAINTENANCE SCHEDULE TABLE - COMPRESSOR INTERVALS

⚠ WARNING

Before performing maintenance:

Shut down machine, relieve all system pressure and lock out all power, as per the Safety Section of this manual.

Always clearly tag the start-up instrumentation against accidental system start-ups during maintenance.

INTERVALS - Refer to **IMPORTANT** under **Table 5B**

KEY	TASK DESCRIPTION	BREAK-IN PERIOD First 50 Hours	DAILY	Every 100 Hours	Every 500 Hours or One (1) year	Every 1000 Hours or Two (2) years	ACTION TO TAKE / REFERENCE
7	Change separator element (continued)					■	*...continued from previous page...* **NOTE:** Coat element sealing rings [✎] on both the separator element, and the compressor element, with a film of compressor oil before securing in place, to assure a complete seal.

TABLE 5B: ROUTINE MAINTENANCE REPLACEMENT KITS - COMPRESSOR

KEY NO.	DESCRIPTION	QTY
KIT1212	Compressor First 50 Hour Maintenance (Vanguard Oil [1 gal], Oil Filter)	1
KIT1221	Compressor 500 Hour Maintenance (Vanguard Oil [1 gal], Oil Filter, Air Filter)	1[I]

[I] For 1000 hour maintenance, order separator element **no. 273080** In addition to this kit.

NOTE: Refer to **Section 7, Table 7A** for kit content item identificaiton, and additional replacement parts items.

IMPORTANT: If working in dusty or dirty conditions, reduce the recommended time intervals between servicing by half for engine and compressor oil change, and engine and compressor filter servicing.

TABLE 5C: MAINTENANCE SCHEDULE TABLE - ENGINE INTERVALS

⚠ WARNING

Before performing maintenance: Shut down machine, relieve all system pressure and lock out all power, as per the Safety Section of this manual. For lock-out/tag-out disconnect the negative (-) battery cable.

INTERVALS
Refer to **IMPORTANT** under **Table 5D**

KEY	TASK DESCRIPTION	Daily	BREAK-IN PERIOD First 50 Hours	Every 25 Hours	Every 100 Hours or One (1) Year	Every 200 Hours	Every 300 Hours	ACTION TO TAKE / REFERENCE
1	Change engine oil		■		■			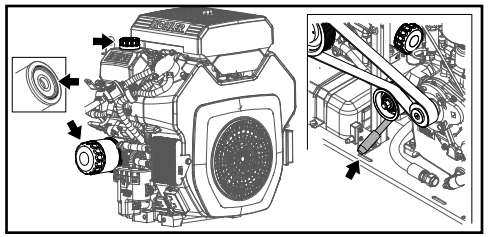 **REFERENCE:** • Oil Drain [⬈] • Oil Filter Element [⬊] • Oil fill Port/Cap [➡] • Element Seal Ring [⬅] **PROCEDURE:** **Order:** Engine Oil (qt) **no. 274439**; Engine Oil Filter **no. 270757** (Also see Full Engine Maintenance Kit **no. KIT1250** in **TABLE 5D**). Consult the oil replacement procedure in the Engine Operation Manual to replace engine oil and engine oil filter.
2	Check engine oil level	■						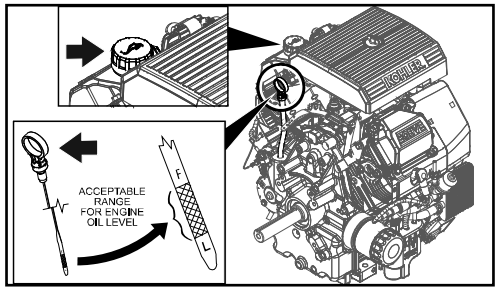 **REFERENCE:** • Dipstick / Oil Level Gauge [⬅] • Oil fill Port/Cap [➡] **PROCEDURE:** Refer to figure at left. With the engine off, locate the dipstick handle and pull upward to remove it. With a clean cloth, wipe it off and replace it into the gauge port. Withdraw it once again to get an oil level reading at the end of the gauge. Acceptable oil level range is between the "F" and "L", as shown. Also, consult engine oil level check procedure in the Engine Operation Manual. For engine oil only (available by the quart) replacement, order **no. 274439** (note that engine capacity is two [2] quarts).
3	Check fuel lines and clamps		■	■				Ensure that all fuel hose connections and fittings are free of any telltale signs of leaking and well connected. Zip-tie any loose length of hose fitting if it appears to have a tendency to shift or contact an abrasive surface while machine is in operation.

Continued on next page

TABLE 5D: ROUTINE MAINTENANCE REPLACEMENT KITS - ENGINE

KEY NO.	DESCRIPTION	QTY
KIT1250	**Engine Maintenance** (Engine Oil [2 quarts], Oil Filter, Air Pre-filter, Air Filter, Fuel Filter, In-line Filter)	1

NOTE: Refer to **Section 7, Table 7A** for additional replacement parts items.

IMPORTANT

If working in dusty or dirty conditions, reduce the recommended time intervals between servicing by half for engine and compressor oil change, and engine and compressor filter servicing.

TABLE 5C: MAINTENANCE SCHEDULE TABLE - ENGINE INTERVALS

⚠ WARNING

Before performing maintenance:
Shut down machine, relieve all system pressure and lock out all power, as per the Safety Section of this manual.
For lock-out/tag-out disconnect the negative (-) battery cable.

INTERVALS
Refer to **IMPORTANT** under **Table 5D**

TABLE 5D: ROUTINE MAINTENANCE REPLACEMENT KITS - ENGINE

KEY NO.	DESCRIPTION	QTY
KIT1250	**Engine Maintenance** (Engine Oil [2 quarts], Oil Filter, Air Pre-filter, Air Filter, Fuel Filter, In-line Filter)	1

NOTE: Refer to **Section 7, Table 7A** for additional replacement parts items.

IMPORTANT

If working in dusty or dirty conditions, reduce the recommended time intervals between servicing by half for engine and compressor oil change, and engine and compressor filter servicing.

KEY	TASK DESCRIPTION	Daily	BREAK-IN PERIOD First 50 Hours	Every 25 Hours	Every 100 Hours or One (1) Year	Every 200 Hours	Every 300 Hours	ACTION TO TAKE / REFERENCE
4	Check engine air intake hose			■				Ensure that the intake hose is properly fastened and free from any compromises such as tears or holes.
5	Clean or replace engine air filter pre-cleaner			■				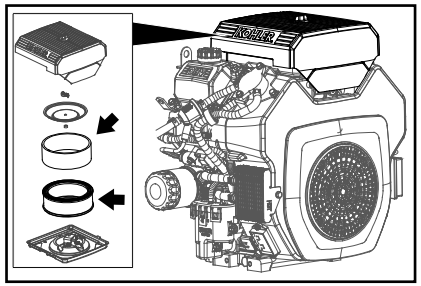 **REFERENCE:** • Engine air pre-cleaner[⬋] • Engine air filter [⬅] **PROCEDURE:** Pre-cleaner (only) **no. 263675** (Also see Full Engine Maintenance Kit **no. KIT1250** in **TABLE 5D**). Consult the air filter service procedure(s) in the Engine Operation Manual.
6	Replace engine fuel filter elements					■		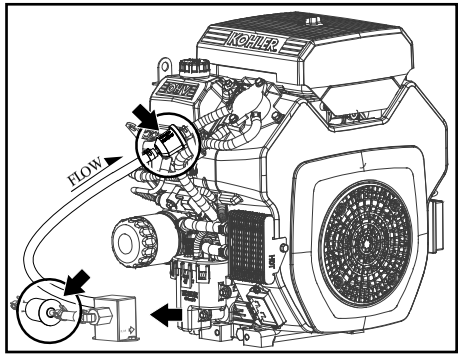 **REFERENCE:** • Kohler Gas Fuel Filter (10 µm) [⬊] • In-line Fuel Filter (75 µm) [⬋] • Fuel Pump [⬅] **PROCEDURE:** Order Kohler gas filter **no. 262724**; and **In-line filter no. RC81465**. (Also see Full Engine Maintenance Kit **no. KIT1250** in **TABLE 5D**). Replace both filters at the same time; ensure that the flow direction (arrow) is correct at installation.
7	Reset gap, or replace engine spark plugs					■		Replace engine spark plug and set the gap, per instructions in the Engine Operation Manual. Note that spark plug replacements can be purchased at most auto and general supply merchandise shops.

Continued on next page

TABLE 5C: MAINTENANCE SCHEDULE TABLE - ENGINE INTERVALS

⚠ WARNING

Before performing maintenance:
Shut down machine, relieve all system pressure and lock out all power, as per the Safety Section of this manual.
For lock-out/tag-out disconnect the negative (-) battery cable.

INTERVALS
Refer to **IMPORTANT** under **Table 5D**

KEY	TASK DESCRIPTION	Daily	BREAK-IN PERIOD First 50 Hours	Every 25 Hours	Every 100 Hours or One (1) Year	Every 200 Hours	Every 300 Hours	ACTION TO TAKE / REFERENCE
8	Replace air filter element						■	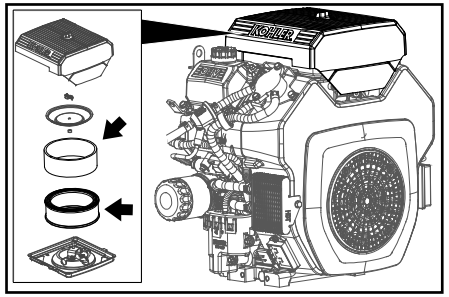 **REFERENCE:** • Engine air pre-cleaner[⬋] • Engine air filter [⬅] **PROCEDURE:** Order air filter replacement **no. 262722** (only) **no. 263675** (Also see Full Engine Maintenance Kit **no. KIT1250** in **TABLE 5D**). Consult the air filter service procedure(s) in the Engine Operation Manual.
9	Have starter serviced	**AT 500 HOURS OF SERVICE**						Refer to the Engine Operation Manual. Have starter serviced by a trained Kohler Service Technician.

TABLE 5D: ROUTINE MAINTENANCE REPLACEMENT KITS - ENGINE

KEY NO.	DESCRIPTION	QTY
KIT1250	**Engine Maintenance** (Engine Oil [2 quarts], Oil Filter, Air Pre-filter, Air Filter, Fuel Filter, In-line Filter)	1

NOTE: Refer to **Section 7, Table 7A** for additional replacement parts items.

IMPORTANT

If working in dusty or dirty conditions, reduce the recommended time intervals between servicing by half for engine and compressor oil change, and engine and compressor filter servicing.

5.4 PARTS REPLACEMENT AND ADJUSTMENT PROCEDURES

5.4.1 ADJUSTING THE BELT TENSION

Refer to ***Figure 5-1***. Drive belt tension should be maintained to avoid premature belt wear, poor performance due to belt slippage, or damage to engine and/or compressor. The Viper Gas has an idler pulley mounted to a tensioning device to set the proper belt tension. To adjust the belt tension, loosen the four (4) tensioner mounting bolts and with a 1/2" square drive torque wrench, apply 40-44 ft-lbs. of torque to the tensioner while re-tightening the tensioner bolts.

5.4.2 ENGINE SPEED ADJUSTMENT

Refer to ***Figure 5-2***. To increase engine RPM, turn adjusment screw [**H**] clockwise. To reduce RPM, turn adjustment screw counter-clockwise.

SPEEDS FOR RESPECTIVE OPERATION				
	60 CFM and 150 PSIG		70 CFM and 100 PSIG	
	IDLE	FULL LOAD	IDLE	FULL LOAD
ENGINE:	2600 RPM	3580 RPM	2600 RPM	3300 RPM
COMPRESSOR:	3485 RPM	4800 RPM [I]	4370 RPM	5540 RPM [II]
[I] Drive ratio - 1:46				
[II] Drive ratio - 1:68				

5.5 SERVICING THE SYSTEM FUSES AND CIRCUIT BREAKER

Refer to the Engine Operation Manual for detailed maintenance and replacement procedures for the engine.

5.6 TESTING THE GAUGES' SHUTDOWN FEATURE

Periodically (every six [6] months or every 500 hours), the shutdown system should be tested as follows:

NOTE

Both the temperature and the pressure gauges should be tested using the contact method explained below.

Refer to ***Figure 5-3***.

1. While compressor is operating, close service valve and allow compressor to unload (approximately two [2] minutes).
2. Touch across button contact [**B**] on gauge face to bezel [**A]** (surrounding the respective gauge) with an insulated screwdriver.

⚠ WARNING

Before making the contact connection [D] between the test contact [B] and the bezel [A], ensure that you are not touching the machine to allow for grounding—only the screwdriver should be making any connection with the machine, and at the contact points indicated.

3. The compressor should stop, indicating that the gauge shutdown contact is working.

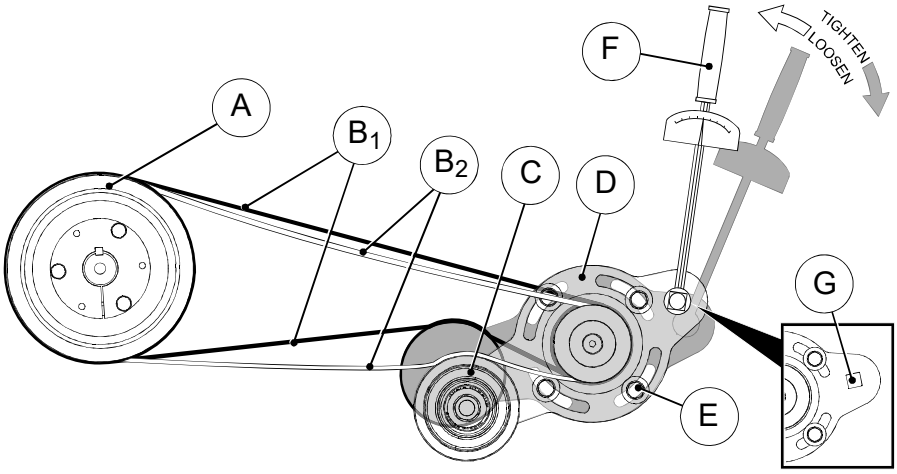

KEY	DESCRIPTION
A	ENGINE DRIVE SHEAVE
B_1	BELT (tensioned; shown black)
B_2	BELT (loosened; shown white)
C	IDLER SHEAVE
D	DRIVE BELT TENSIONER
E	TENSIONER BOLT SET (washer, bolt; x 4) [I]
F	TORQUE WRENCH [I]
G	TENSIONER ADJUSTMENT PURCHASE HOLE (square)

[I] Apply 1/2" square torque wrench (40-44 ft-lbs).

Figure 5-1: Tensioning or Loosening the Drive Belt

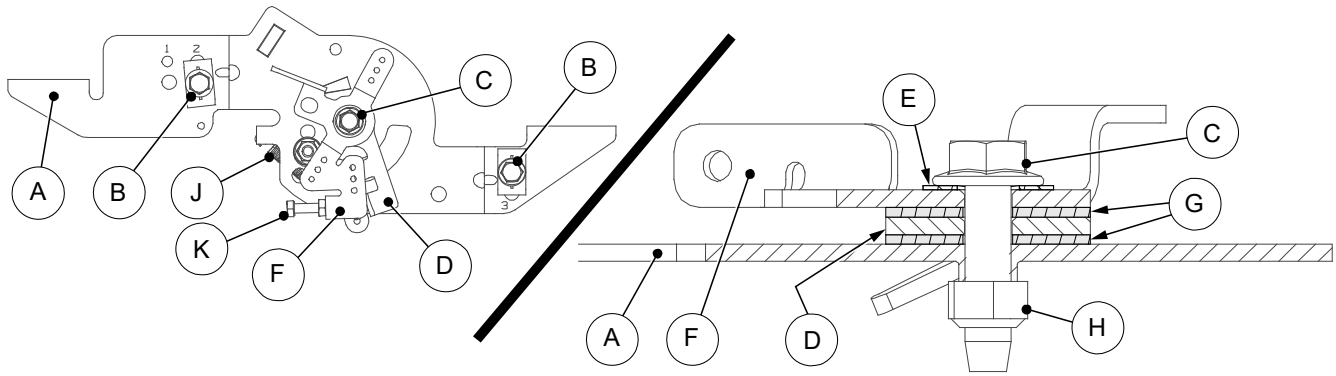

KEY	DESCRIPTION	KEY	DESCRIPTION
A	SPEED CONTROL BRACKET	F	THROTTLE CONTROL LEVER (TOP)
B	CABLE CLAMP (x 2)	G	FLAT WASHER (x 2)
C	SCREW	H	NUT
D	THROTTLE CONTROL LEVER (BOTTOM)	J	RETURN SPRING
E	SPRING WASHER	K	ADJUSTMENT SCREW

Figure 5-2: Engine Speed Adjustment

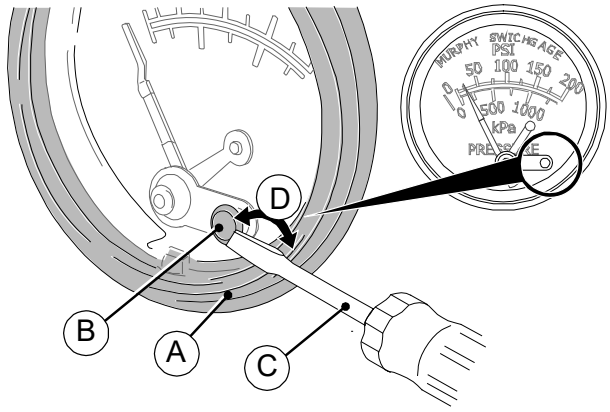

KEY	DESCRIPTION
A	GAUGE BEZEL
B	GAUGE TEST METAL CONTACT
C	INSULATED SCREWDRIVER
D	SAFETY TEST CONTACT CONNECTION

Figure 5-3: Safety Shutdown Test

4. Switch compressor OFF.

NOTE

Ensure that system blows down fully before restarting.

5.7 STORAGE AND INTERMITTENT USE

5.7.1 INTERMITTENT USE

If the unit is not used very regularly always treat the fuel with a fuel stabilizer.

Check all belts and hoses for signs of deterioration such as visible surface cracks, stiffness or discoloration.

NOTE

In order to ensure that the compressor is maintained in working order during prolonged periods of non-use, refer to Section 4.3.1.2, Infrequent Use, for for steps to take to avoid the condition of oil emulsification.

5.7.2 LONG TERM STORAGE

Disconnect the battery cable that is connected to the negative (-) side of the battery.

Cover the unit with a tarp or plastic to prevent the accumulation of dust, but leave the bottom open for air circulation.

Fill the fuel tank with fuel and fuel stabilizer to prevent moisture build-up in the tank.

SECTION 6: TROUBLESHOOTING

6.1 GENERAL INFORMATION

This section contains symptoms and usual causes for the most common types of problems that may occur. All available data concerning the trouble should be systematically analyzed before undertaking any repairs or component replacement.

A visual inspection is worth performing for almost all problems and may avoid unnecessary additional damage to the machine. The procedures which can be performed in the least amount of time and with the least amount of removal or disassembly of parts should be performed first.

⚠ WARNING

Before starting, performing maintenance, or replacing parts, relieve the entire system pressure by opening a service valve, which will vent all pressure to the atmosphere.

Although Vanair® strives to anticipate situations that may occur during the operation life of the machine package, the Troubleshooting Guide may not cover all possible situations. Be aware that additional troubleshooting information may be found in other sources, such as the Engine Operation Manual. Should the situation remain unresolved after exhausting available sources, contact the Vanair Service Department at:

Toll Free: 844-VAN-SERV 844-[826-7378]

Phone: 219-879-5100

Fax: 219-879-5335

This section contains symptoms and usual causes for the most common types of problems that may occur. All available data concerning the trouble should be systematically analyzed before undertaking any repairs or component replacement.

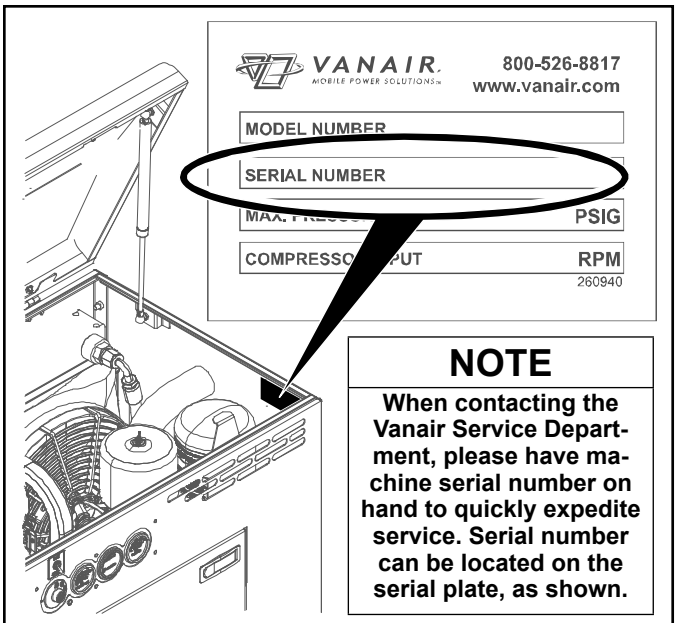

NOTE

When contacting the Vanair Service Department, please have machine serial number on hand to quickly expedite service. Serial number can be located on the serial plate, as shown.

Figure 6-1: Machine Serial Plate/Serial Number Location

A visual inspection is worth performing for almost all problems and may avoid unnecessary additional damage to the machine. The procedures which can be performed in the least amount of time and with the least amount of removal or disassembly of parts should be performed first.

Although Vanair strives to anticipate situations that may occur during the operation life of the machine package, the Troubleshooting Guide may not cover all possible situations. Should the situation remain unresolved after exhausting available sources, contact the Vanair Service Department, with the machine serial number readily available (refer to ***Figure 6-1***).

6.2 TROUBLESHOOTING GUIDE

Fault/Malfunction	Possible Cause	Corrective Action
Failure to Start	No Fuel	Fill if necessary.
	Pinched Fuel Line	Replace or reroute.
	Plugged Fuel Filter	Replace fuel filter / fuel filter element.
	Low Battery Voltage	Recharge or replace.
		Loose connections-tighten.
		Dirty connections-clean.
	Plugged Air Filter	Replace air filter element.
	Defective Oil Pressure Switch	Check continuity-replace.
	Defective Air Temperature Switch	Check continuity-replace.
	Blown Fuse	Check continuity-replace.
	Poor ground connection	Check and clean/renew.
	Engine problems	Refer to Engine Operation Manual.
Compressor Shuts Down with Air Demand	No Fuel	Fill if necessary.
	Compressor Temperature Switch Opening	Low oil level-top up.
		Restricted cooling air intake; clean-reposition machine.
		Fan not operating; check ground, check fan switch.
	Plugged Oil Filter	Replace oil filter element.
	Dirty Cooler Core	Clean.
	Contaminated Cooler Core	Remove and clean.
	Defective Engine Oil Pressure Switch	Replace.
	Engine Speed Too Low	Adjust and reset.
Compressor will Not Build Up Pressure	Air Demand Too Great	Check for leaks/correct.
		Too much air demand.
	Air Filter Plugged	Check and replace air filter element, if needed.
	Defective Pressure Regulator	Replace.
	Pressure Regulator Out of Adjustment	Reset.
	Engine Does Not Speed Up	Pressure regulator.
		Speed control adjustment.
		Engine governor stuck.
	Control Cylinder Stuck	Replace.
	Belts Slipping	Readjust.
Compressor Over Pressures	Pressure Regulator Out of Adjustment	Reset.
	Defective Pressure Regulator	Replace.
	Leak in Air Control Line	Check and correct.
	Inlet Valve Stuck	Free or replace, if necessary.
	Restriction in Control Line	Dirt or ice, clean/free up.
	Check Valve Stuck	Replace.

Continued on next page

6.2 TROUBLESHOOTING GUIDE

Fault/Malfunction	Possible Cause	Corrective Action
Compressor Over pressures (continued)	Faulty Gauge	Check with shop air/replace.
	Defective Safety Valve	Replace.
	Plugged Coalescer	Replace coalescer element.
Insufficient Air Delivery	Plugged Air Filter	Replace air filter element.
	Plugged Coalescer	Replace coalescer element.
	Defective Pressure Repgulator	Replace.
	Engine Speed Too Low	Adjust and reset.
	Inlet Valve Stuck	Free or replace.
	Belts Slipping	Readjust.
Oil Carryover	Oil Level Overfull	Drain to correct level.
	Plugged Oil Scavenge Orifice	Remove and clean.
	Scavenge Return Line Kinked	Replace/re-route.
	Check Valve Stuck	Replace.
	Discharge Pressure Too Low	Review air usage.
		Check pressure regulator setting.
	Defective Coalescer	Replace coalescer element.
Compressor Overheating	Insufficient Oil	Check level and top up (DO NOT overfill).
	Restricted Cooling Air Flow	Reposition machine; remove restictions to air flow.
	Fan Not Operating	Check ground connection.
		Check fan switch.
		Check air pressure switch.
		Check circuit breaker.
		Check for shorted wires.
		Check fan motor.
	Plugged Oil Filter	Replace oil filter element.
	Cooler Core Plugged	Clean.
	Pressure Set Too High	Readjust.
	Restricted Cooling Air Flow	Reposition machine.
	Contaminated Cooler Core	Remove and clean.
System Retains Pressure After Shutdown	No Signal to Blowdown Valve	Check pilot line for leak/fold.
	Blowdown Silencer Plugged	Clean or replace.
	Blowdown Valve Plugged	Replace.
	Plugged Coalescer Element	Replace.
Improper Control Operation	Engine Does Not Speed Up	Cylinder stuck, replace.
		Governor stuck, free/lube.
		Operating pressure too high.
		Fuel filter partly plugged.

Continued on next page

6.2 TROUBLESHOOTING GUIDE

Fault/Malfunction	Possible Cause	Corrective Action
Improper Control Operation (continued)	Engine Does Not Slow Down	Leak in control line.
		Pressure regulator out of adjustment.
		Pressure regulator faulty.
		Air cylinder stuck, replace.
		Governor stuck, free/lube.
Engine Overheating [I]	Low Oil Level	Top up to acceptable level; **DO NOT** overfill.
	Oil Filter Plugged	Replace oil filter element.
	Restricted Cooling Air In/Out	Clean engine intake grill.
		Too close to obstruction; move machine or remove obstruction.
		Engine oil cooler plugged; inspect/clear.
	Compressor Pressure Too High	Readjust.

[I] Consult Engine Manual for additional engine information.

6.3 EXTREME CONDITION OPERATION

When operating in extreme cold or hot conditions, in the presence of high humidity, or at a high altitude, extra attention should be given to any indication that could lead to a serious problem. Engine power and compressor air output will be reduced at high altitude or hot ambient temperatures.

Machine review and maintenance check schedules should be more frequent than the normal suggestions given in the Maintenance Schedule Tables (**Table 5A**, and **Table 5B** in **Section 5**).

Become acquainted with the situation-adjusted operation approaches given in this section before operating the power system package in any type of extreme ambient condition. For additional operation information consult the Engine Operation Manual, or visit the engine manufacturer's web site given in that manual.

6.3.1 HIGH MOISTURE CONDITION: EMULSIFICATION OF OIL IN ROTARY SCREW COMPRESSOR SYSTEMS

Consult the information in **Table 6.3A** for preventative and/or repair measures. If machine is operating in a high moisture environment, water contamination may persists after following the regular preventative maintenance schedule and standard operating procedures.

6.3.2 COLD WEATHER OPERATION

Consult the information in **Table 6.3B** for preventative and/or repair measures. The Gas Viper can be more difficult to start in cold weather. Once the engine is started, the air density becomes larger and the intake efficiency also becomes higher. More output can be expected in cold areas. When the temperature is very low, extra care must be taken regarding fuel and oil changes in their viscosity, freezing of water contained in the piping, or of water adhering on the filter.

6.3.3 HIGH TEMPERATURE OPERATION

Consult the information in **Table 6.3C** for preventative and/or repair measures. Reduce load duty cycle to less than 60% when operating in ambient temperatures above 104°F (40°C).

Extra care should be taken to keep the engine and air compressor clean and to not restrict the air flow around the unit. Consult the Engine Operator's Manual for fuel, lubrication oil and cooling requirements under extreme temperatures.

When operating the machine in high temperature areas, precautions should be taken to prevent overheating. At the minimum, all coolers, including air passage ways around the coolers, should be free of debris and dirt.

TABLE 6.3A - HIGH MOISTURE CONDITION OPERATION		
Symptom	**Cause**	**Prevention / Corrective Action**
Emulsification of oil in compressor system: • Compressor oil is milky white in color • Compressor oil is broken down and lacks lubricity. • Compressor oil may develop solid chunks or clumps	**Operating the compressor system for short periods of time:** • Short cycling prevents the temperature of the oil from attaining a high enough temperature capable of vaporizing the moisture droplets. **Operating the compressor system unloaded without air flow from the service line for long periods of time:** • This can keep the oil temperature from getting hot enough to vaporize the moisture droplets, preventing the moisture from being able to escape the system. Additionally, there is no path for the moisture to escape the system. **The air filter is saturated with water:** • This forces moisture to be ingested by the compressor. **Any of the above causes will be exacerbated in especially humid environments.**	**RECOMMENDED CHANGES:** If the problem is not corrected by standard operating practices and regular preventative maintenance, consider the following: • Raise the average temperature of the compressor oil. • Change the operating procedure to allow for the compressor oil temperature to reach 180 °F before discharging any air. If the compressor isn't discharging any air, it's not ingesting any potentially humid air. It will build pressure upon initial startup, but then it will run closed and allow it to heat up. **REPAIR/MAINTENANCE:** Refer to Section 5 of the Operator's Manual for inspection, cleaning, and repair instructions. 1. Once the compressor oil becomes emulsified, it must be replaced along with the oil filter. Depending on the severity, other parts might also need to be replaced. 2. Check that the separator element is in good, working condition. 3. Check that the scavenge line is working properly. If the system is badly contaminated, Vanair® recommends a lube flush that will help clean out any remaining contamination throughout the system. Consult Vanair Service Department for lube flush instructions. Check the moisture drain frequently on the air tank reservoir, to alleviate moisture build-up.

The operator should be aware that high temperatures can influence engine performance, which can directly effect some machine function capacity outputs.

6.3.4 HIGH DUST CONTENT OPERATION

Consult the information in **Table 6.3D** for preventative and/or repair measures. When the machine is to be used in continuously dusty environments, special care must be taken with the engine's air cleaner, compressor air cleaner, and compressor oil cooler.

6.3.5 HIGH ALTITUDE OPERATION

Engine horsepower will decrease by 3.5% for every 1,000 feet above sea level. At high altitude overall unit performance will deteriorate, and care will need to be taken not to overload the engine.

6.4 ENGINE FAULT CODES

The engine ECU continuously monitors engine operation against preset performance limits. If the operation is outside the limits, the ECU activates the engine fault indicator lights, and stores a diagnostic code in its fault memory. If the component or system returns to proper function, the ECU will turn the engine fault indicator lights off. If the engine fault indicator lights stay illuminated, a fault is currently happening, and service is required.

The fault code(s) can be accessed in order to help determine what portion of the system is malfunctioning. The 4-digit fault codes available are listed in **Table 6.4**.

The codes are accessed through the key switch and displayed as blinks or flashes of the engine fault indicator lights, as shown in the example in ***Figure 6-2***. Access the codes as follows:

TABLE 6.3B - COLD WEATHER OPERATION

Symptom	Cause	Prevention / Corrective Action
Water freezes in the fuel line Lubrication oil viscosity increases	**WATER** Water in the fuel can freeze at temperatures below 32°F (0°C), blocking fuel lines. At an extremely cold temperature, the viscosity of lubrication oil may increase and the torque of starter may exceed its permissible value, hindering proper starting.	• Park the vehicle or equipment indoors when not in use. • Check the fuel filter regularly to insure that it contains no water. • Use a block heater. • Maintain the battery; this will make it easier to start a diesel engine in cold weather. • In below zero temperatures a fuel line deicer product may need to be used. • Vanguard™ Premium Synthetic Oil is suitable for use from -40°F to 110°F (-40°C to 43°C). • For additional engine precautions, consult the Engine Operator's Manual. • Vanair® recommends installation of the cold weather heater option kit. Consult Table 7A in Section 7 for cold weather kit option. • Keep the fuel tank full to prevent condensation from forming inside the tank and lessen the chances of water getting in the fuel line. • The standard recommendation of 15W-40 engine oil is suitable for temperatures down to -4°F (-20°C). If temperatures are consistently below 30°F (-1°C), it is recommended that 5W-30 oil be used. If temperatures are below -25°F (-32°C), a high-performance, fully synthetic oil, such as AMSOIL 5W-30 should be used which is suitable to temperatures of -55°F (-48°C).

TABLE 6.3C - HIGH TEMPERATURE OPERATION

Symptom	Cause	Prevention / Corrective Action
Overheating/high compartment temperatures Diminished engine performance	High ambient temperatures, confined spaces, soundproof cases and other reasons. Among these the most important factor is the temperature of the intake and cooling air.	• Extra care should be taken to keep the engine and air compressor clean and to not restrict the air flow around the unit. • Consult the Engine Operation Manual for fuel, lubrication oil and cooling requirements under extreme temperatures. • At the minimum, all coolers, including air passage ways around the coolers, should be free of debris and dirt. The fan, driven by the engine, is designed to run continuously to assure a constant flow of cooling air. • If high ambient overheating occurs, reduce the duty cycle. The operator should be aware that high temperatures can influence engine performance, which can directly effect some machine function capacity outputs.

1. Check that the battery voltage is above 11 volts.
2. Start with the key switch OFF.
3. Turn the key switch to the ON and OFF, then ON and OFF, then ON, leaving it on in the third sequence. Do not start the engine. The time between sequences must be less than 2.5 seconds.
4. The MIL will blink a series of times. The number of times the MIL blinks represents a number in the blink code.
5. A sequence of four digits make up a fault code. There is a one (1) second pause between the blinks of a fault code. There is a three (3) second pause between separate fault codes. After the fault code(s) are blinked a two digit 61 is blinked to indicate the program has completed.

- It is a good idea to write down the codes as they appear, as they may not be in numerical sequence.
- Code 61 will always be the last code displayed, indicating the end of code transmission. If code 61 appears immediately, no other fault codes are present.

After the problem has been corrected, the fault codes may be cleared by following the ECU Reset and TPS Learn Procedures (contact the Vanair® Service Department).

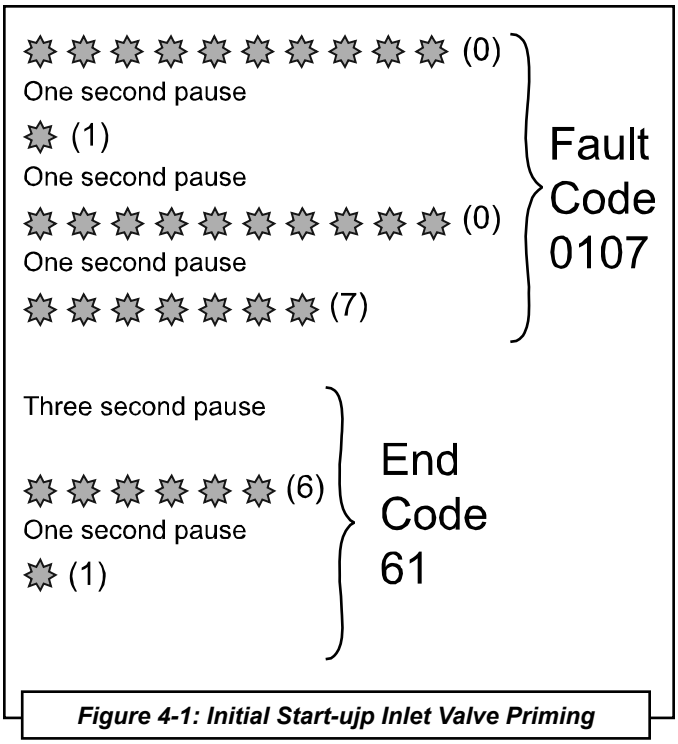

Figure 4-1: Initial Start-ujp Inlet Valve Priming

Table 6.4 lists the fault codes along with their corresponding descriptions.

TABLE 6.3D - HIGH DUST CONTENT OPERATION

Symptom	Cause	Prevention / Corrective Action
Overheating System contamination Stalling	Machine components exposed to frequent or constant dust interaction, can result in diminished system performance, or machine cessation.	• The intake air must be cleaned with the air cleaner—inspect the air filter frequently for dust build-up and replace as needed. • Ensure that the oil cooler fins are kept clean to prevent overheating. • If the machine is not being used for an extended period of time, an additional precaution, such as covering the machine with a tarp, will help to keep the inside of the machine free of dust particle accumulation. • For extreme cases of high dust content environments, machine fluids may need to be replaced at more frequent intervals. Adjust maintenance schedule accordingly.

TABLE 6.4 - DIAGNOSTIC CODES

FAULT	CONNECTION OR FAILURE DESCRIPTION
0031	Oxygen Sensor Heater Circuit High Voltage
0032	Oxygen Sensor Heater Circuit Low Voltage
0107	Manifold Absolute Pressure Sensor Circuit Low Voltage or Open
0108	Manifold Absolute Pressure Sensor Circuit High Voltage
0112	Intake Air Temperature Sensor Circuit Low Voltage
0113	Intake Air Temperature Sensor Circuit High Voltage or Open
0117	Coolant/Oil Temperature Sensor Circuit Low Voltage
0118	Coolant/Oil Temperature Sensor Circuit High Voltage or Open
0122	Throttle Position Sensor Circuit Low Voltage or Open
0123	Throttle Position Sensor Circuit High Voltage
0131	Oxygen Sensor 1 Circuit Low Voltage, or Open
0132	Oxygen Sensor 1 Circuit High Voltage
0171	Maximum Adaptation Limit Exceeded
0172	Minimum Adaptation Limit Exceeded
0174	Lean Fuel Condition at High Load (Open Loop)
0201	Injector 1 Circuit Malfunction
0202	Injector 2 Circuit Malfunction
0230	Fuel Pump Module Circuit Low Voltage or Open
0232	Fuel Pump Module Circuit High Voltage
0336	Crankshaft Position Sensor Noisy Signal
0337	Crankshaft Position Sensor No Signal
0351	Cylinder 1 Ignition Coil Malfunction
0352	Cylinder 2 Ignition Coil Malfunction
0562	System Voltage Low
0563	System Voltage High
61	End of Code Transmission

SECTION 7: ILLUSTRATED PARTS LIST

7.1 PARTS ORDERING INFORMATION

Part orders should be placed through the distributor from whom the unit was purchased. If for any reason parts cannot be obtained in this manner, contact the factory directly at the address or phone numbers below.

When ordering parts always indicate the Serial Number of the machine package. This can be obtained form the Bill of Lading for the machine package, or from the unit's serial number plate. See ***Figure 7-1*** for location of machine package serial plate. **Consult Table 7A: Recommended Spare Parts List** on the next page for a listing of replacement parts.

Vanair Manufacturing, Inc.

10896 West 300 North

Michigan City, IN 46360

Telephone (toll free): (800) 526-8817

Service (toll free): (844) VAN-SERV

(844) 826-7378

Telephone: (219) 879-5100

Service Fax: (219) 879-5335

Parts Fax: (219) 879-5340

Sales Fax: (219) 879-5800

www.vanair.com

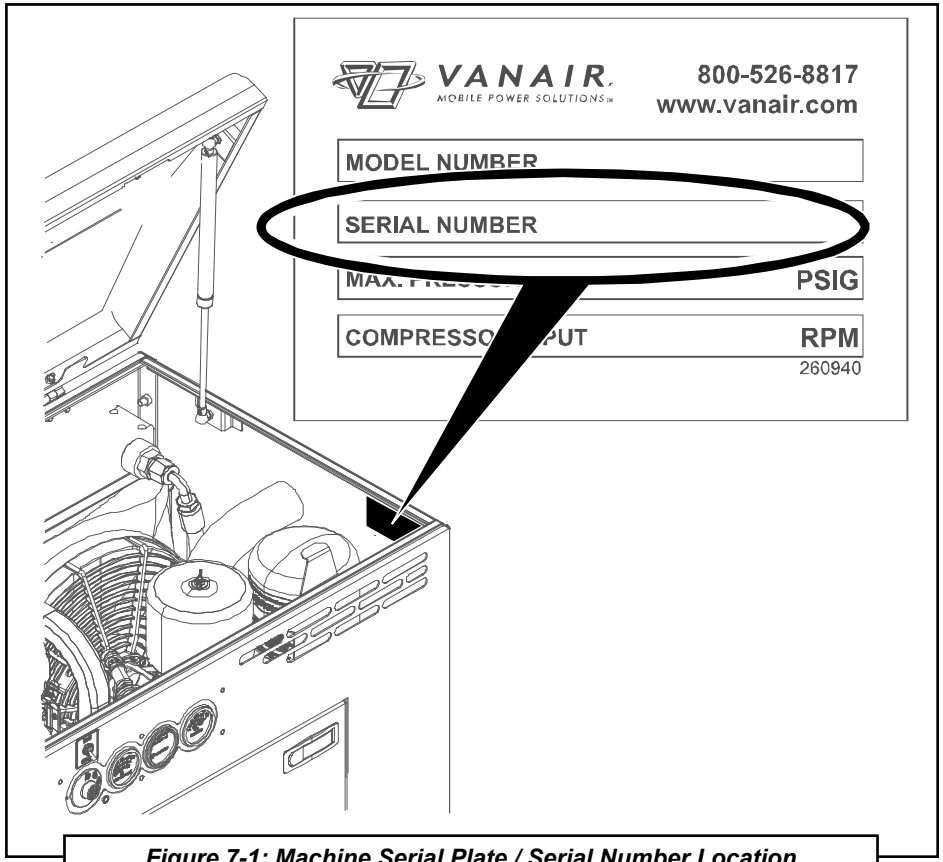

Figure 7-1: Machine Serial Plate / Serial Number Location

TABLE 7A: RECOMMENDED SPARE PARTS LIST

FULL SERVICE MAINTENANCE KITS

KEY NO.	DESCRIPTION	ORDER NO.	QTY	KEY NO.	DESCRIPTION	ORDER NO.	QTY
1	Kit, Engine Service (filters [air pre-cleaner, air, oil, gas, inline] and motor oil) [I]	**KIT1250**	1	4	Kit, Compressor Shaft Seal Replacement	**KIT1257**	1
2	Kit, Compressor Service - Initial 50 Hours [II & III]	**KIT1212**	1	5	Kit, Hose Replacement	**274194**	1
3	Kit, Compressor Service - 500 Hours [IV & V]	**KIT1221**	1	6	Option, (Kit for) Cold Weather	**032983**	1

INDIVIDUAL MAINTENANCE ITEMS

KEY NO.	DESCRIPTION	ORDER NO.	QTY	KEY NO.	DESCRIPTION	ORDER NO.	QTY
7	Filter, replacement element engine oil	**270757**	1	12	Filter, replacement engine in-line fuel (75µ)	**RC81465**	1
8	Filter, replacement element engine gas (10µ)	**EN269654**	1	13	Oil, compressor Vanair Vanguard™ premium oil	**264626-1GAL**	1 gal
9	Pre-filter, replacement engine air	**263675**	1	14	Filter, replacement element compressor air	**266801**	1
10	Filter, replacement element engine air	**262722**	1	15	Belt, serpentine replacement [VI]	-	1
11	Oil, engine motor	**274439**	1 qt				

[I] Kit **no. KIT1250** consists of: air pre-filter element (**no. 263675**), air filter element (**no. 262722**), engine oil filter (**no. 270757**), gas filter (**no. EN269654**), in-line fuel filter (**no. RC81465**), and Kohler motor oil, by quart (**no. 274439**; x 2 [quarts]).

[II] Use only Vanair® Vanguard™ Premium Synthetic Oil and Genuine Vanair Parts. Substituting non-Vanguard™ Oil or non-genuine Vanair filter components **WILL VOID THE COMPRESSOR WARRANTY!** Inspect and replace damaged components before operation. System fill capacity is approximately four (4) quarts.

[III] Kit **no. KIT1212** consists of: Vanair Premium Synthetic Oil, by gallon (**no. 264626-1GAL**; x 2 [gallons]), compressor oil filter (**no. 266801**).

[IV] Kit **no. KIT1221** consists of: Vanair Premium Synthetic Oil, by gallon (**no. 264626-1GAL**; x 2 [gallons]), compressor oil filter (**no. 266801**), and air filter element (**no. 265546-004**).

[V] For 1000 hour maintenance, order separator element **no. 273080** In addition to this kit.

[VI] Refer to table shown in **Section 7.2, Compressor and Parts**, for specifications on matching the proper replacement belt to machine.

PLEASE NOTE: WHEN ORDERING PARTS, INDICATE MACHINE SERIAL NUMBER.

IMPORTANT

The above table listing contains items that require maintenance on a routine basis, and also those parts that may require maintenance over the course of the compressor package's performance schedule. Although this recommended list is pro-offered as a comprehensive guide to replacement parts, damage may occur to the machine beyond the scope of this listing.

Should any part of the compressor package that is not listed in Table 7A become damaged or inoperable, use the various sub-sections in Section 7 to best locate and identify the damaged part(s).

IMPORTANT

If additional spare parts are being stored for future use, ensure that they are stored in proper containers that allow for protection against contamination, and kept in a clean area of moderate temperature reading. For information on storing the machine package for periods of non-use, consult Section 5.5, Long Term Storage.

NOTES

7.2 COMPRESSOR AND PARTS

ASSEMBLY DRAWING STANDARD NOTES:
1. USE LOCTITE 567 THREAD SEALANT WITH PTFE OR EQUIVALENT SEALANT ON ALL MALE PIPE THREADS.
2. LUBRICATE ALL SEALS/GASKETS/O-RINGS BEFORE TIGHTENING.
3. ALL BOLTS TO BE TORQUED TO THEIR RESPECTIVE SAE TORQUE SPECIFICATIONS, FOR THEIR GRADES AND SIZES.
4. CHECK CONTINUITY OF COALESCER ELEMENT.
5. TORQUE TO BE 45 FT-LBS ON TENSIONER BRACKET.
6. HOSE 274197 IS PART OF KIT 274194.

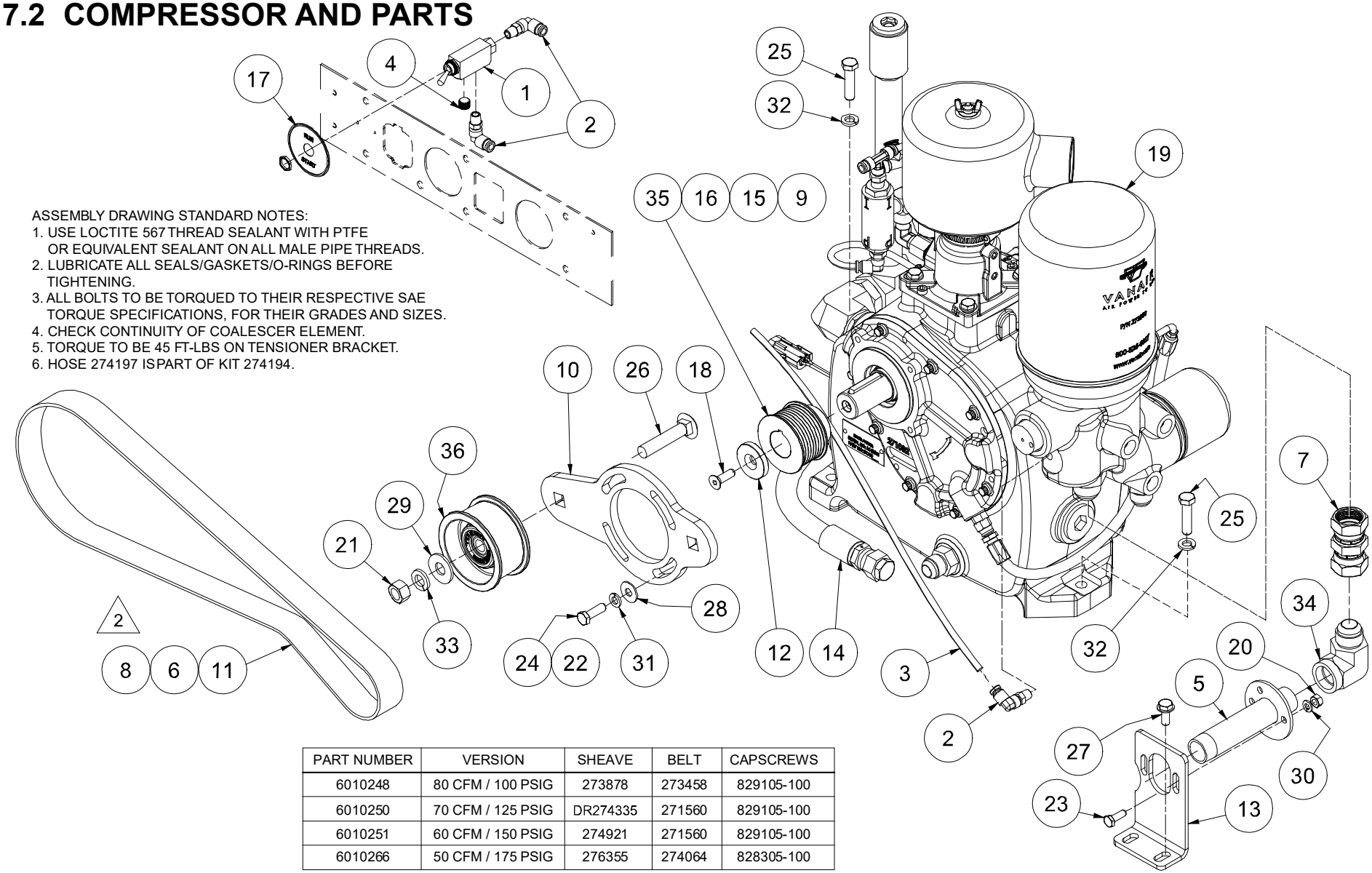

PART NUMBER	VERSION	SHEAVE	BELT	CAPSCREWS
6010248	80 CFM / 100 PSIG	273878	273458	829105-100
6010250	70 CFM / 125 PSIG	DR274335	271560	829105-100
6010251	60 CFM / 150 PSIG	274921	271560	829105-100
6010266	50 CFM / 175 PSIG	276355	274064	828305-100

6010248ID_r2

7.2 COMPRESSOR AND PARTS

ITEM	DESCRIPTION	PART NUMBER	QTY	ITEM	DESCRIPTION	PART NUMBER	QTY
1	VALVE, AIR TOGGLE 3 WAY	250057-083	1	19	AIR END & ATT, VSE075DDSS	6180013	1
2	ELBOW, 1/4T x 1/8P PUSH-ON	261309	3	20	NUT, 1/4-20 UNC	825204-226	2
3	TUBING, PLASTIC 1/4 WHITE	261322	2 ft	21	NUT, HEX 1/2-13	825208-448	1
4	PLUG, PIPE HEX SOCKET BRASS 1/8” NPT	267258	1	22	CAPSCREW, S.H. 5/16-18 x 1	828305-100	4
5	NIPPLE, PIPE 3/4 x 5 w/ FLANGE CON ED	268134	1	23	CAPSCREW, HEX GR5 1/4-20 x 0.75	829104-075	2
6	BELT, SERPENTINE GATORBACK	271560	1	24	CAPSCREW, HEX GR5 5/16-18 x 1	829105-100	4
7	UNION, SWIVEL FJIC X FJIC 3/4	271844-005	1	25	CAPSCREW, HEX GR5 3/8-16 x 1.5	829106-150	3
8	BELT, SERPENTINE GATORBACK	273458	1	26	BOLT, CARRIAGE 1/2-13UNC X 2-1/2” LG.	829508-250	1
9	SHEAVE, DRIVE K SECTION 8 GROOVE 2.50 OD	273878	1	27	SCREW, SER WASH 5/16-18 x 0.75	829705-075	2
10	TENSIONER, BELT GAS VIPER	273988	1	28	WASHER, FLAT 5/16	838205-071	4
11	BELT, SERPENTINE GATORBACK	274064	1	29	WASHER, FLAT 1/2	838208-112	1
12	RETAINER, SHEAVE GAS VIPER	274066	1	30	WASHER, LOCK 1/4	838504-062	2
13	SUPPORT, DISCHARGE CONNECTION GAS VIPER	274083	1	31	WASHER, LOCK 5/16	838505-078	4
14	HOSE, ASSY 0.63 X 25.5 X FJIC X 90FJIC	274197	1	32	WASHER, LOCK 3/8	838506-094	3
15	SHEAVE, DRIVE K SECTION 8 GROOVE 3.00 OD	274921	1	33	WASHER, LOCK 1/2	838508-125	1
16	SHEAVE, DRIVE K SECTION 8 GROOVE 3.50 OD	276355	1	34	ELBOW, 37FL/90F 3/4 x 3/4	860312-075	1
17	DECAL, START/RUN GAS VIPER	280791	1	35	SHEAVE, DRIVE K SECTION 8 GROOVE 2.75 OD	DR274335	1
18	SCREW, MACH FLAT HD 5/16-18 X 1 SOCKET HD	278763	1	36	IDLER, 1.375 WIDTH, 3 3/8DIA	DR46584	1

PLEASE NOTE: WHEN ORDERING PARTS, INDICATE MACHINE SERIAL NUMBER.

7.3 AIR END AND ATTACHMENTS

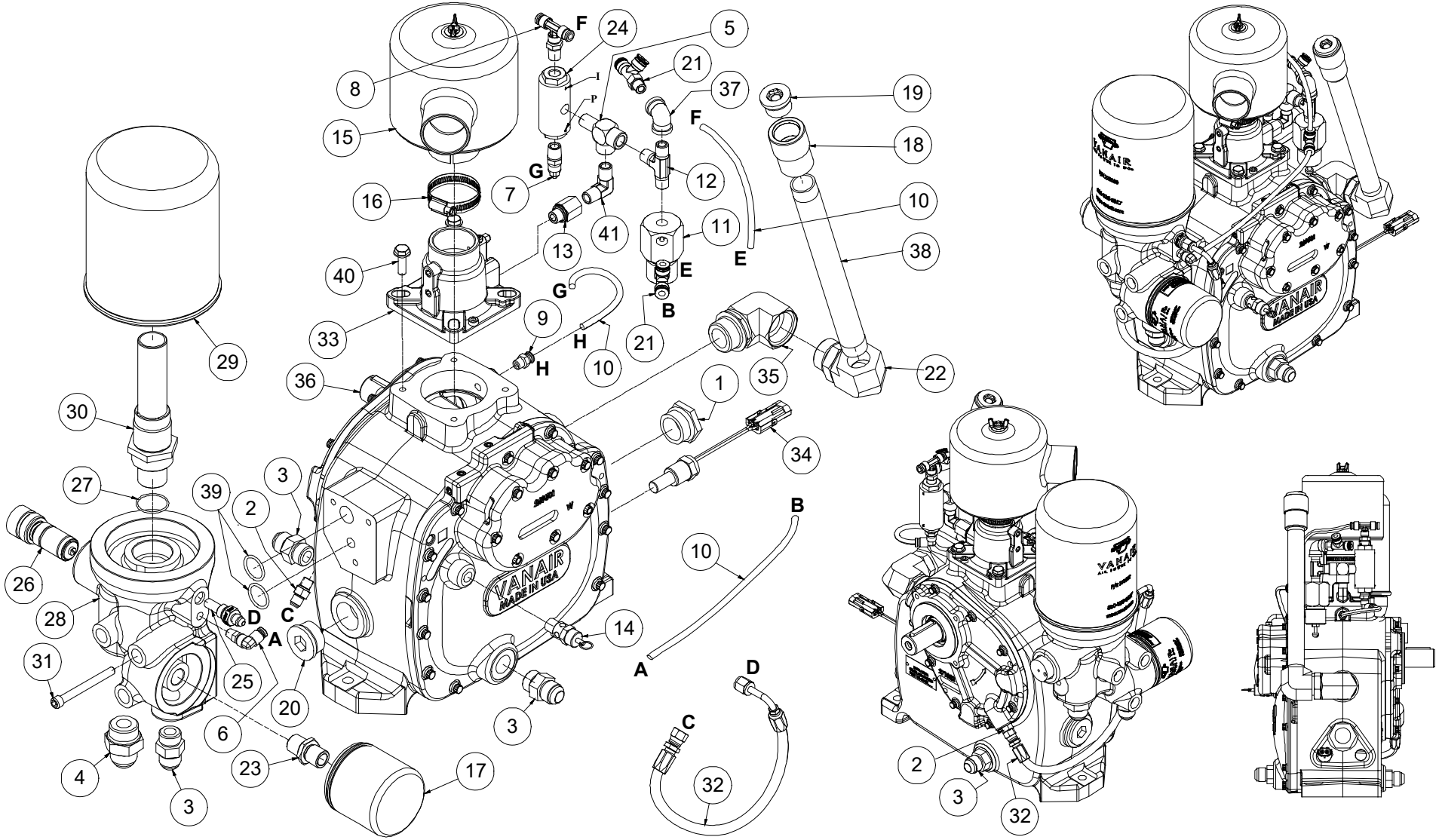

7.3 AIR END AND ATTACHMENTS

ITEM	DESCRIPTION	PART NUMBER	QTY	ITEM	DESCRIPTION	PART NUMBER	QTY
1	SIGHT GLASS, O-RING TMBD 1 5/16”	250097-610	1	22	ELBOW, 90 DEG #16 MSAE x 3/4 FNPT	269071-009	1
2	CONNECTOR, O-RING 1/4 SAE x 1/4 JIC	260387-103	1	23	CONNECTOR, OIL FILTER VANAIR ENCAPS	270037	1
3	CONNECTOR, O-RING 5/8 x 5/8 JIC	260387-109	3	24	VALVE, BLOWDOWN 1/4 PISTON	270807	1
4	CONNECTOR, O-RING 1-3/16 x 3/4 JIC PARK-ER	260387-143	1	25	ORIFICE, STRAINER 0.030 #6 MSAE X #4 MJIC	271054	1
5	TEE, MALE STREET 1/4 x 1/4 x 1/4	260402-102	1	26	VALVE, MIN PRESS INTERNAL PARTS VMI80	271079	1
6	ELBOW, 1/4T x 1/8P PUSH-ON	261309	1	27	O-RING, VITON 1/16 DIA X 1.176 ID	272689	1
7	ELBOW, 90 deg. PUSH ON 1/4T x 1/4P	261310	1	28	MANIFOLD, AIR/OIL VMI80	272920	1
8	TEE, 1/4P x 1/4 T	261313	1	29	SEPARATOR, AIR/OIL SPIN ON 106CFM	273080	1
9	CONNECTOR, 1/8P x 1/4T PUSH ON	261316	1	30	ADAPTER, AIR/OIL SEPARATOR M42 X M39	273081	1
10	TUBING, PLASTIC 1/4 WHITE	261322	2 ft	31	CAPSCREW, HX SOC 5/16-18 X 3	273239	3
11	VALVE, REGULATOR, 6:1	262047	1	32	HOSE,ASSY 0.25 X 18 JIC SWV STR X JIC SWV 90	273247	1
12	TEE, MALE PIPE 1/4	262781-002	1	33	VALVE INLET, 1.5” VMC RH38	273396	1
13	ADAPTER, FEMALE PIPE x BSPP 1/4	263748-004	1	34	SWITCH, TEMP (ELECTRIC) 185 NO LONG	273786	1
14	VALVE, RELIEF 200 PSI 1/4 NPT MALE	264232	1	35	ELBOW, 90 16MSAE X 16FSAE	274743	1
15	FILTER, AIR UNDERHOOD	265546	1	36	COMPR & PARTS VSE075DDSS000	6170002	1
16	CLAMP, HOSE #28	265560	1	37	ELBOW, PIPE GALV 90 DEG 1/4	803515-010	1
17	FILTER, OIL 6” TANK	266801	1	38	NIPPLE, PIPE GALV 3/4 x 10	823112-100	1
18	ADAPTER, 3/4 NPT TO 1 1/16 SAE O-RING	267483	2	39	O-RING, VITON 1.130 OD X 3/32	826502-119	2
19	PLUG, SAE O-RING HOLLOW HEX #12	268081-008	4	40	SCREW, SER WASH 5/16-18 x 1	829705-100	4
20	PLUG, SAE O-RING HOLLOW HEX #16	268081-010	1	41	ELBOW, PIPE 1/4M x 1/4M	860504-025	1
21	FITTING, MALE RUN TEE 1/4 x 1/4 PUSH ON	268779	2				

PLEASE NOTE: WHEN ORDERING PARTS, INDICATE MACHINE SERIAL NUMBER.

7.4 ENGINE AND DRIVE PARTS

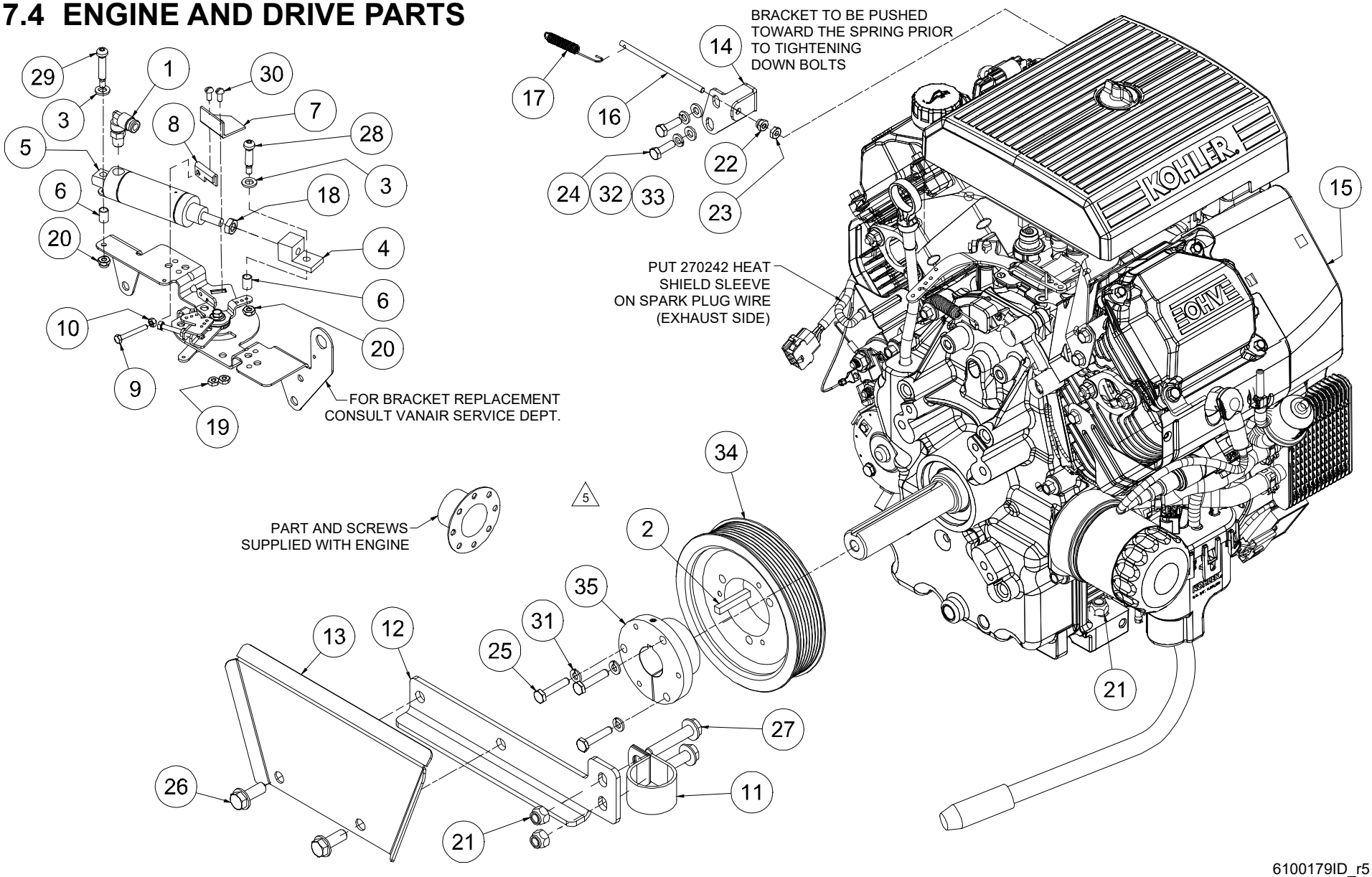

6100179ID_r5

7.4 ENGINE AND DRIVE PARTS

ITEM	DESCRIPTION	PART NUMBER	QTY	ITEM	DESCRIPTION	PART NUMBER	QTY
1	ELBOW, 1/4T x 1/8P PUSH-ON	261309	1	20	NUT, HEX LOCKING #10-24	825502-083	2
2	KEY, SQUARE 1/4 X 1/4 X 1 1/2	262082	1	21	NUT, HEX LOCKING 3/8-16	825506-198	6
3	WASHER, NYLON FLAT 1/4	262704	3	22	NUT, HEX LOCKING #10-32	825702-083	1
4	CLEVIS, ENG. CONTROL	262711	1	23	NUT, HEX #10-32	825801-130	1
5	CYLINDER, AIR KOHLER ENGINE	262712	1	24	CAPSCREW, HEX 6mm 1 x 20	828006-020	2
6	TUBE, SPACER 5/16 OD x 7/16 LONG	262760	2	25	CAPSCREW, HEX GR5 1/4-20 x 1.25	829104-125	3
7	ANGLE, IDLE STOP KOHLER25	262837	1	26	SCREW, SER WASH 3/8-16 x 1	829706-100	2
8	SUPPORT, ENGINE IDLE ADJ. VIPER	262838	1	27	SCREW, SER WASH 3/8-16 x 2	829706-200	2
9	SCREW, HEX M4-.7 X 30mm	263696	1	28	SCREW, MACH SHOULDER 1/4 X 3/4	830504-075	1
10	NUT, HEX M4-.7	263697	1	29	SCREW, MACH SHOULDER 1/4 X 1	830504-100	1
11	CLAMP, HOSE SUPPORT 1.50 ID	263812	1	30	SCREW, ROUND HD #8-32 X 3/8 INCH	831601-038	2
12	BRACKET, ENGINE TO LIFT BALE GAS VIPER II	274792	1	31	WASHER, LOCK 1/4	838504-062	3
13	SHIELD, HEAT ENGINE GAS VIPER II	274996	1	32	WASHER, LOCK METRIC M6	838806-160	2
14	BRACKET, VIPER GAS THROTTLE SPRING ADJUST-MENT	276655	1	33	WASHER, FLAT METRIC M6	838906-180	2
15	ENGINE, GAS KOHLER 26.5 EFIPA-ECH749-XXXX	276672	1	34	SHEAVE, SERPENTINE, 8 GROOVE	A15891Z	1
16	ROD, THREADED 10-32 x 4 w/ HOLE	276676	1	35	BUSHING, SDS, QD, 1 1/8DIA	DR85785Z	1
17	SPRING, EXTENSION SPEED CONTROL HELPER	276713	1	NS	LOOM, FIBERGLASS HIGH TEMP 1/2 INCH (1200F)	270242	7 in
18	NUT, JAM RH 5/16	824605-195	1	NS	ENGINE, GAS KOHLER 23 EFI PA-ECH-730-3073	276673	1
19	NUT, HEX #8-32	825201-130	2				

PLEASE NOTE: WHEN ORDERING PARTS, INDICATE MACHINE SERIAL NUMBER.

7.5 FRAME AND CANOPY

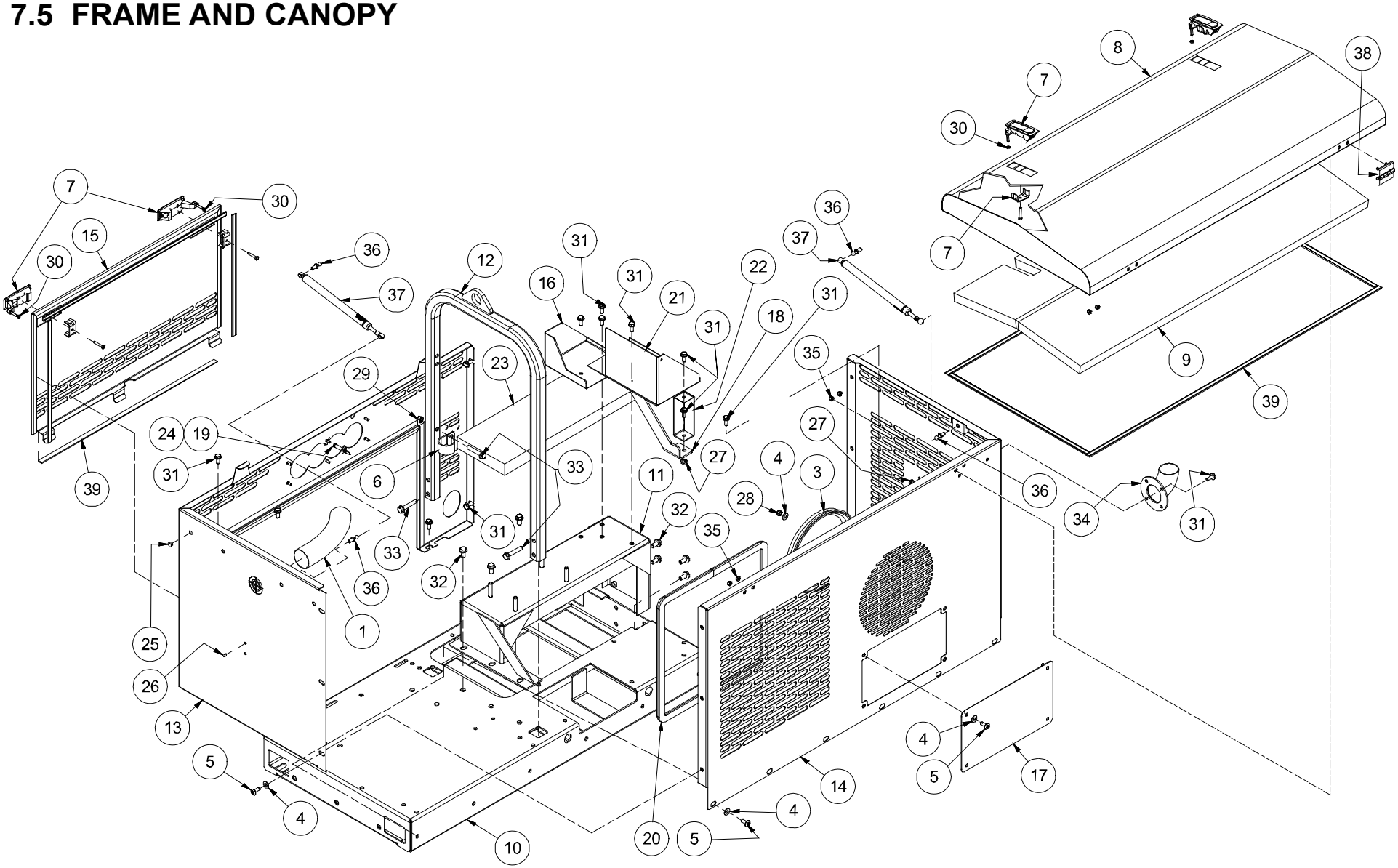

6030087ID_r7_TP

7.5 FRAME AND CANOPY

ITEM	DESCRIPTION	PART NUMBER	QTY	ITEM	DESCRIPTION	PART NUMBER	QTY
1	HOSE, FLEX 2”	262705	1	21	SHIELD, HEAT MUFFLER VIPER GAS	276817	1
2	PAD, FUEL TANK	262709	3.5 ft	22	BRACKET, SUPPORT MUFFLER BAFFLE VIPER GAS	276818	1
3	SEAL, RUBBER AIR INLET	262785	2.5	23	BLANKET, INSULATION VIPER GAS ABOVE FUEL TANK	276824	1
4	WASHER, NYLON 5/16-18	262943	13	24	NUT, PUSH TINNERMAN 5/16 3W LED	277273	1
5	SCREW, TRUSS HD 5/16-18x3/4 SS	262945	12	25	PLUG, HOLE 3/8 DIA, WH	279970	4
6	CLAMP, HOSE SUPPORT 1.50 ID	263812	1	26	PLUG, HOLE 1/4 DIA, WH	279971	2
7	LATCH, SENTRY PANEL	267124	4	27	NUT, HEX FLANGE 5/16-18	825305-283	5
8	HOOD, CANOPY	272250	1	28	NUT, HEX LOCKING 5/16-18	825505-166	1
9	INSULATION, ACOUSTICAL FOAM, HOOD	272713-001	1	29	NUT, HEX LOCKING 3/8-16	825506-198	1
10	FRAME, GAS VIPER	273985	1	30	NUT, HEX METERIC M5 x .8	825905-080	2
11	SUPPORT, ENGINE GAS VIPER	273986	1	31	SCREW, SER WASH 5/16-18 x 0.75	829705-075	19
12	BAIL, LIFTING GAS VIPER	273987	1	32	SCREW, SER WASH 3/8-16 x 0.75	829706-075	7
13	PANEL, FRONT GAS VIPER	274005	1	33	SCREW, SER WASH 3/8-16 x 2	829706-200	5
14	PANEL, REAR SIDE	274006	1	34	EXHAUST, OUTLET ELBOW	A14883P	1
15	PANEL, DOOR FRONT ACCESS GAS VIPER	274007	1	35	NUT, LOCK, M6 X 1.0 PITCH	FA55272	8
16	SHIELD, HEAT GAS VIPER II	274333	1	36	STUD, BALL, .39DIA. X .55LG.	FA58724	4
17	PANEL, ACCESS GAS VIPER II	274768	1	37	GAS SPRING, 6 STROKE, 20#	HA72205	2
18	BRACE, ENGINE SUPPORT GAS VIPER II	274769	1	38	HINGE, 2” X 2”, BLACK	HA88014	2
19	LAMP, INDICATOR 12V 0.3W RED LED DAY-LIGHT	276038	1	39	GASKET, SEAL AND TRIM	PR35734	20.0 ft
20	SEAL, BULB D-SHAPE 3/4 WIDE	276201	5.5 ft				

PLEASE NOTE: WHEN ORDERING PARTS, INDICATE MACHINE SERIAL NUMBER.

7.6 COOLING SYSTEM

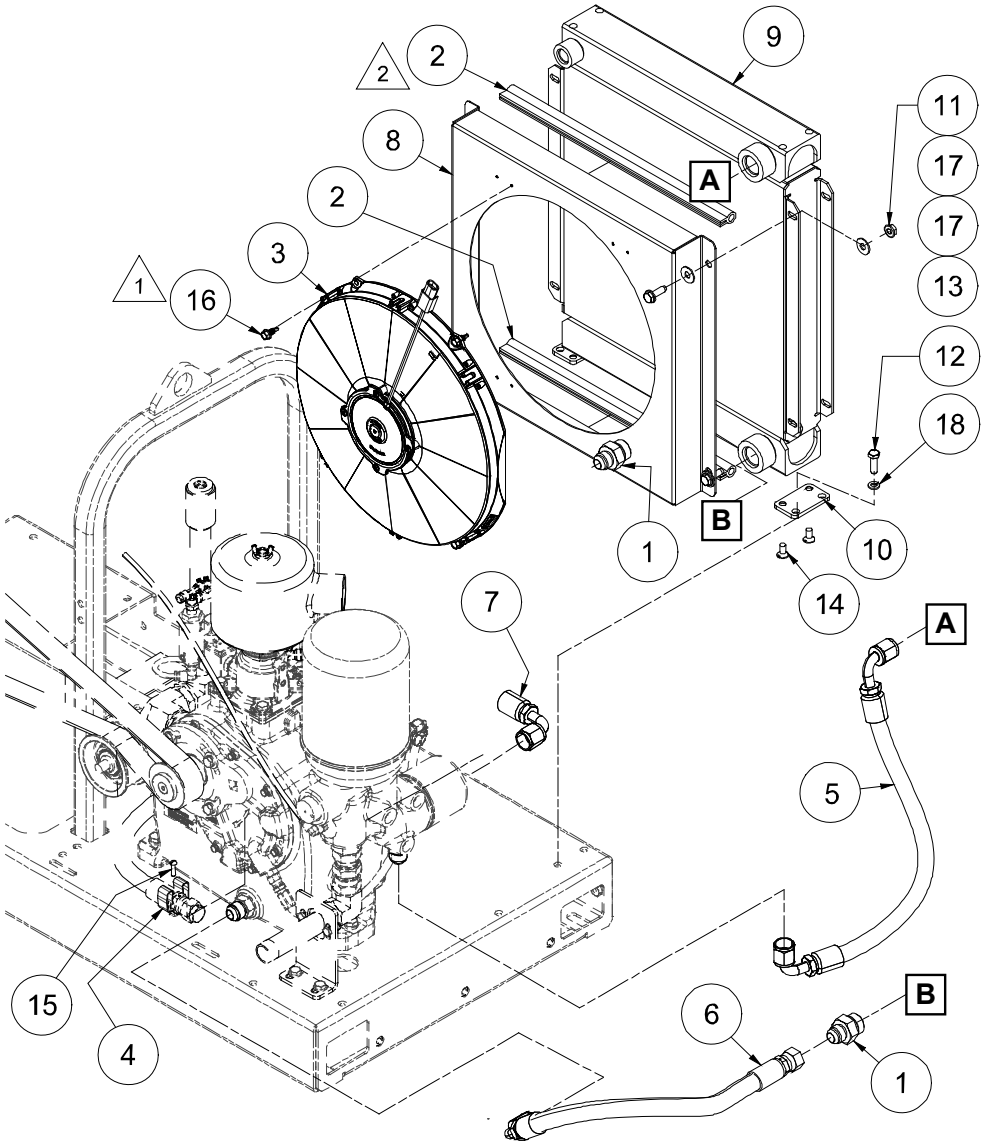

ITEM	DESCRIPTION	PART NUMBER	QTY
1	CONNECTOR, #12 MSAE x #10 MJIC	260387-110	2
2	SEAL, RUBBER TRIM 1/8 IN GROOVE	262785	2.6 ft
3	FAN & MOTOR ASSY. 60-85 12V	265224	1
4	CLIP, TOOL ZINC 3/4 TO 1-1/8	272059	1
5	HOSE, ASSY 0.63 X 22.0 90FJIC X 90FJIC	274195	1
6	HOSE, ASSY 0.63 X 22.25 X 90FJIC X FJIC	274196	1
7	HOSE, ASSY 0.63 X 25.5 X FJIC X 90FJIC	274197	1
8	SHROUD, COOLER LOW AMP FAN	279459	1
9	COOLER, ASSEMBLY GAS VIPER II	279658	1
10	BRACKET, FOOT COOLER GAS VIPER II	279659	2
11	NUT, HEX FLANGE 5/16-18	825305-283	4
12	CAPSCREW, HEX GR5 5/16-18 x 1	829105-100	4
13	SCREW, SER WASH 5/16-18 x 1	829705-100	4
14	SCREW, MACH FLAT HD 5/16-18 x 0.50	831205-050	4
15	SCREW, MACHINE #10-24 X 3/4	831602-075	1
16	SCREW, TEK SELF DRILL 1/4X3/4	834504-075	4
17	WASHER, FLAT 5/16	838205-071	8
18	WASHER, LOCK 5/16	838505-078	4

PLEASE NOTE: WHEN ORDERING PARTS, INDICATE MACHINE SERIAL NUMBER.

6020123-001ID_r2_TP

7.7 INSTRUMENT PANEL

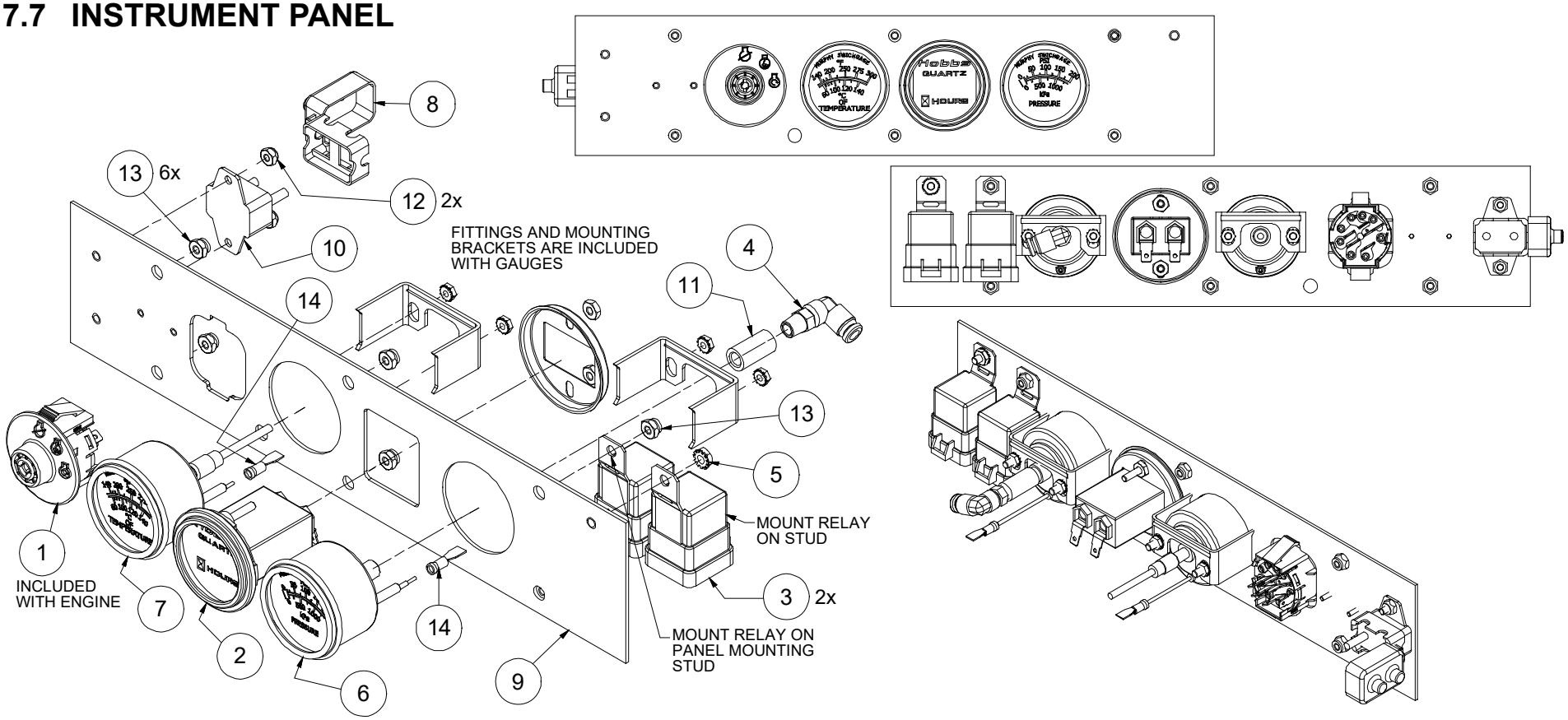

ITEM	DESCRIPTION	PART NUMBER	QTY	ITEM	DESCRIPTION	PART NUMBER	QTY	ITEM	DESCRIPTION	PART NUMBER	QTY
1	SWITCH, KEYED IGNITION 5 PIN [I]	274173	1	5	NUT, HEX #10-32 KEPS	261595-024	1	10	BREAKER, CIRCUIT w/ STUDS 40A	275558	1
2	GAUGE, HOUR METER	040035	1	6	GAUGE, AIR PRESSURE w/ SWITCH	261974	1	11	COUPLING, PIPE 1/8	806230-005	1
3	RELAY, NO/NC WEATHERPROOF w/RESISTOR	260246	2	7	GAUGE, TEMP. MURPHY 6 1/2	266740	1	12	NUT, HEX LOCKING #8-32	825501-070	2
				8	BOOT, CIRCUIT BREAKER COVER	267307	1	13	NUT, HEX LOCKING #10-24	825502-083	6
4	ELBOW, 1/4T x 1/8P PUSH-ON	261309	1	9	PANEL, INSTRUMENT GAS VIPER II	274008	1	14	TERMINAL, SPADE 16-14 MALE .250	850016-250	2

[I] Part is included with engine.

PLEASE NOTE: WHEN ORDERING PARTS, INDICATE MACHINE SERIAL NUMBER.

6040136ID_r3

7.8 FUEL TANK AND PUMP ASSEMBLY

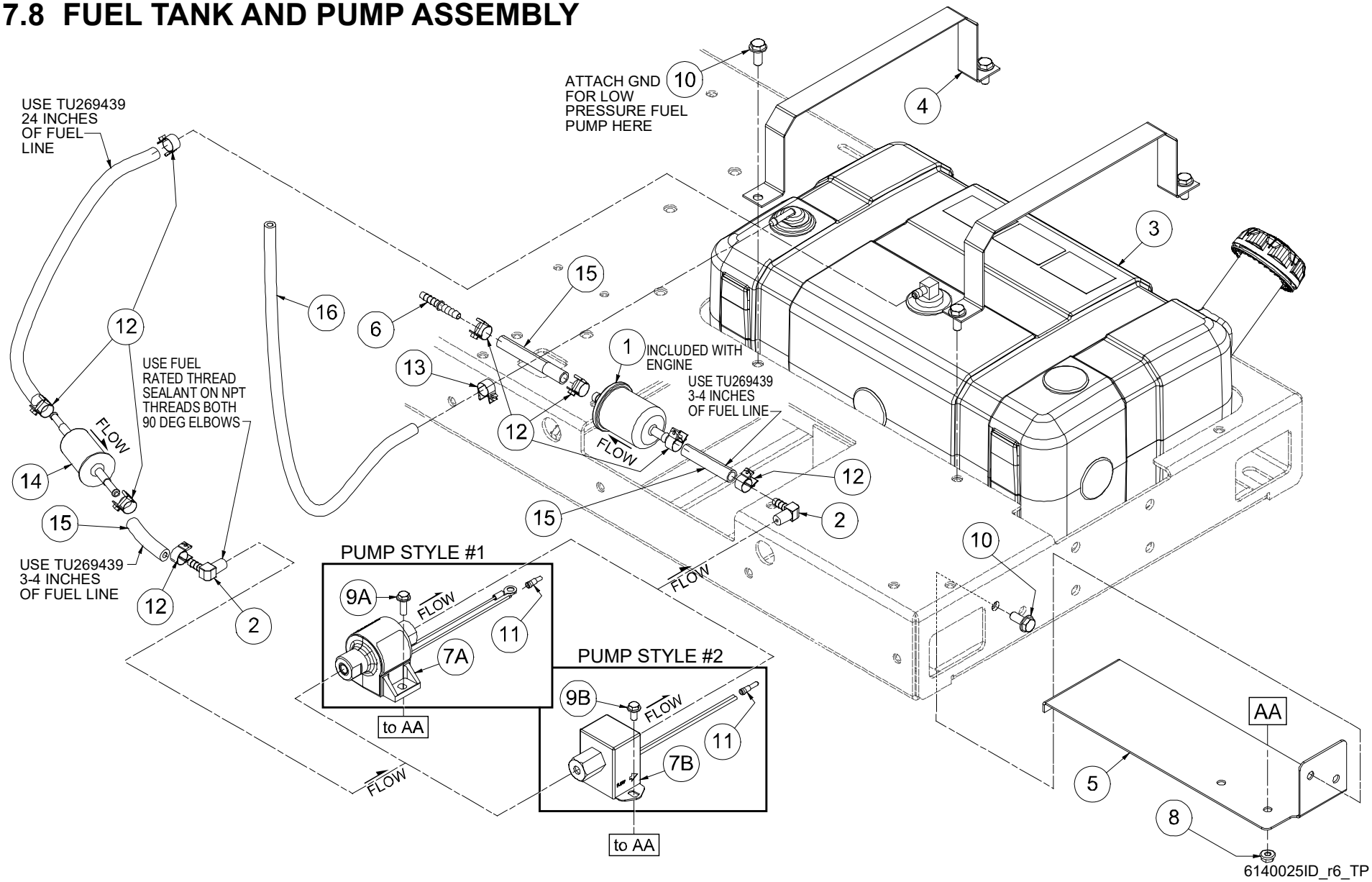

7.8 FUEL TANK AND PUMP ASSEMBLY

ITEM	DESCRIPTION	PART NUMBER	QTY
1	FILTER, FUEL KOHLER GAS	262724	1
2	ELBOW, 1/8 NPT x 1/4 HOSE BARB	269963	2
3	TANK, FUEL GAS VIPER II	274063	1
4	RETAINER, FUEL TANK GAS VIPER	274082	2
5	BRACKET, SUPPORT FUEL PUMP VIPER GAS	276819	1
6	UNION, HOSEBARB 1/4 x 1/4	276863-004	1
7A	PUMP, FUEL 1-2.5PSI 25GPH	280723	1
7B	FUEL PUMP, 12V SOLID STATE, 1.5-2.5 PSI	MA53288	1
8	NUT, HEX FLANGE 1/4-20	825304-236	2
9A	SCREW, SER WASH 1/4-20 x 0.75	829704-075	2
9B	SCREW, SER WASH 1/4-20 x 0.5	829705-050	2
10	SCREW, SER WASH 5/16-18 x 0.75	829705-075	6
11	TERMINAL, BULLET, MALE .156 14-16	EL71619	1
12	CLAMP, HOSE, T-BOLT STYLE, 12mm	FA86779	8
13	CLAMP, HOSE, T-BOLT STYLE, 10M	FA91153	1
14	FILTER, INLINE FUEL 1/4-5/16”	RC81465	1
15	HOSE, FUEL 1/4 INCH SAE 30R9 CARB	TU269439	3.5 ft
16	HOSE, FUEL 3/16” SAE 30R7 CARB	TU28641	1.5 ft
NS	TERMINAL, HEAT SHRINK BUTT-CONNECT	264059	2
NS	TERMINAL, RING 5/16 14-16 GA	849305-014	1
NS	WIRE, 18 GAUGE BLACK	850210-018	1 ft
NS	WIRE, 18 GAUGE RED	850212-018	2 ft
NS	HEAT SHRINK, 3/8 TUBE	PR84018	0.5 ft

PLEASE NOTE: WHEN ORDERING PARTS, INDICATE MACHINE SERIAL NUMBER.

7.9 ELECTRICAL SYSTEM

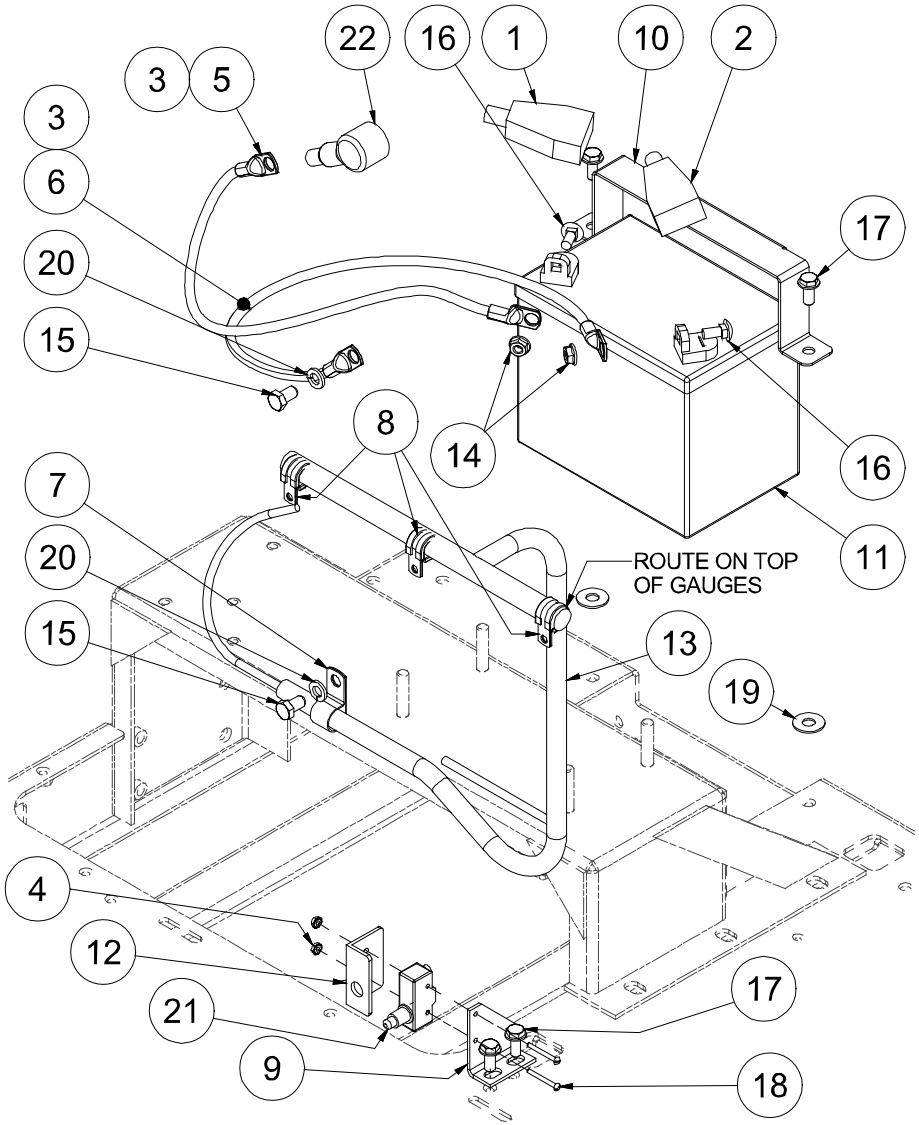

ITEM	DESCRIPTION	PART NUMBER	QTY
1	INSULATOR, BATTERY TERM. RED	261191	1
2	INSULATOR, BATTERY TERM. BLACK	261192	1
3	LOOM, FLEX-GUARD 3/8	261410	2.33 ft
4	NUT, HEX #6-32 KEPS	261595-632	2
5	CABLE, BATTERY POSITIVE	263942	1
6	CABLE, BATTERY VIPER NEG	263943	1
7	CLAMP, HOSE SUPPORT 3/4 I.D.	265711	1
8	CLAMP, LOOM #010 5/8”	268503	3
9	BRACKET, FRONT DOOR SWITCH	273509	1
10	RETAINER, BATTERY GAS VIPER	274080	1
11	BATTERY, 12V GROUP U1LF 350 CCA	277481	1
12	BRACKET, SAFETY SWITCH MOUNT GAS VIPER II	278484	1
13	HARNESS, GAS VIPER II AIR CYL	279660	1
14	NUT, HEX FLANGE 5/16-18	825305-283	2
15	CAPSCREW, HEX GR5 3/8-16 x 0.625	829106-062	2
16	BOLT, CARRIAGE 5/16-18UNC X 3/4” LG.	829505-075	2
17	SCREW, SER WASH 5/16-18 x 0.75	829705-075	4
18	SCREW, MACHINE #6 x 32 x 1.25 LG	831600-125	2
19	WASHER, FLAT 3/8	838206-071	2
20	WASHER, LOCK 3/8	838506-094	2
21	SWITCH, HOOD SAFETY NO/NC 15A-125V. AC	CO81774	1
22	BOOT, PROTECTIVE, BATTERY POST	PR95497	1
PLEASE NOTE: WHEN ORDERING PARTS, INDICATE MACHINE SERIAL NUMBER.			

6060270-001ID_r0

7.10 WIRING DIAGRAM

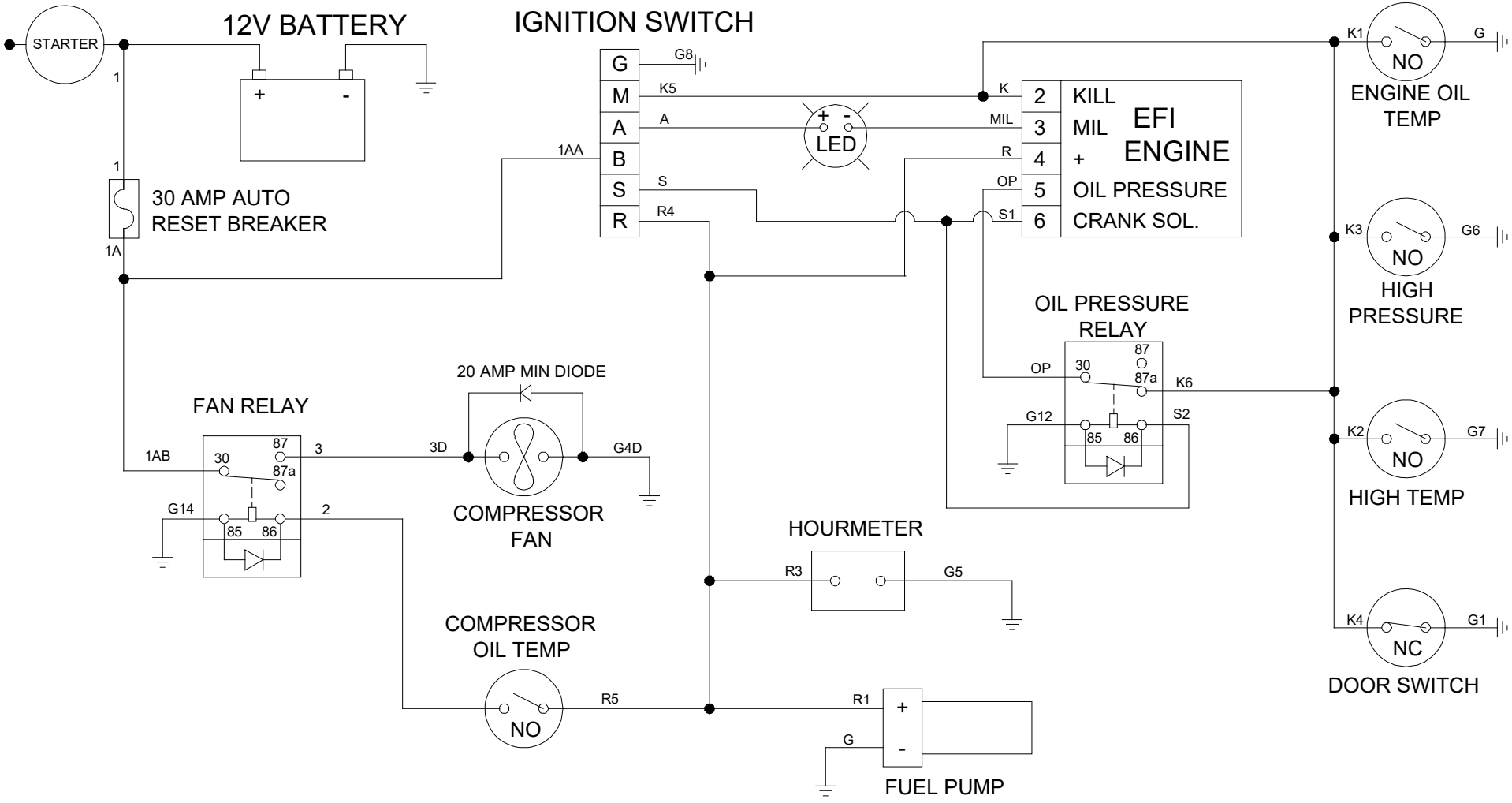

276683_r1
Harness (ref): 279660_r1

7.11 DECALS (1 OF 2)

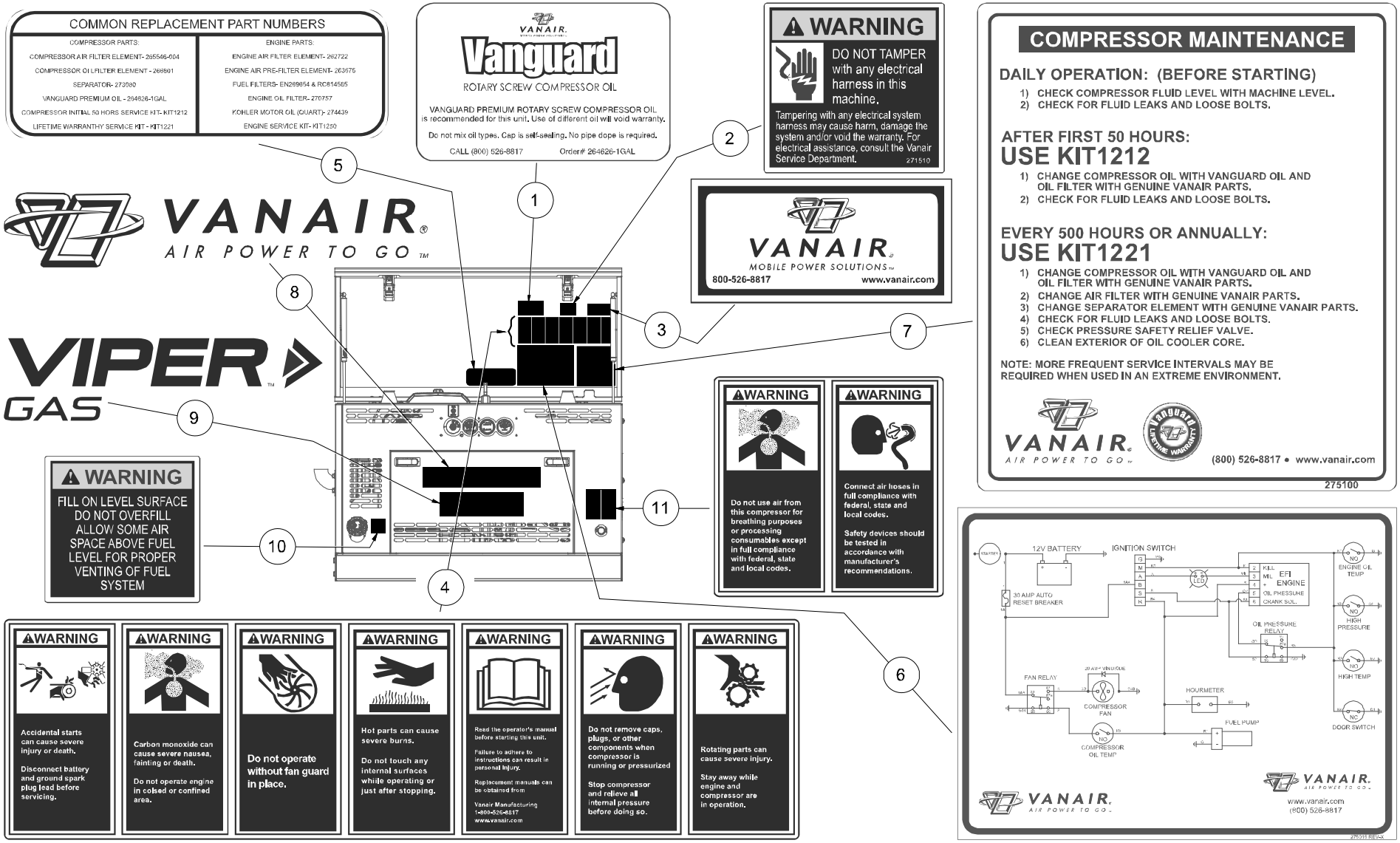

7.11 DECALS (1 OF 2)

ITEM	DESCRIPTION	PART NUMBER	QTY	ITEM	DESCRIPTION	PART NUMBER	QTY
1	DECAL, ROTARY SCREW OIL	272501	1	13	DECAL, START/RUN GAS VIPER	276775	1
2	DECAL, WARNING ELECTRIC TAMPER	271510	1	14	DECAL, COMPRESSOR FLUID DRAIN	275054	1
3	DECAL, VANAIR ADDRESS	265605	1	15	DECAL, ENGINE OIL DRAIN	275053	1
4	DECAL, WARNINGS INTERIOR GAS VIPER	275052	1	16	LOGO, VANAIR STACKED - AIR POWER TO GO	275039-C	1
5	DECAL, REPLACEMENT PART NUMBERS VIPER G SERIES	278231	1	17	DECAL, WARNING-ACID	264375	1
6	DECAL, WIRING DIAGRAM	275015	1	18	DECAL, HOT PARTS	264372	1
7	DECAL, COMPRESSOR MAINTENANCE GAS VIPER	275100	1	19	DECAL, ROTATING PARTS	264374	1
8	DECAL, VANAIR AIR POWER TO GO (21.3" LENGTH)	275038-C	1	20	DECAL, FAN GUARD	264378	1
9	DECAL, LOGO VIPER HORIZONTAL (12.5" LENGTH)	75037-A	3	21	DECAL, ACCIDENTAL STARTS	264373	1
10	DECAL, DECAL, WARNING FUEL FILL GAS VIPER	275070	1	22	DECAL, CAP AND PLUG REMOVAL	264383	1
11	DECAL, WARNINGS EXTERIOR GAS VIPER	275051	1	23	DECAL, EXPLOSIVE FUEL	264377	1
12	PLATE, SERIAL VANAIR	260940	1				

PLEASE NOTE: WHEN ORDERING PARTS, INDICATE MACHINE SERIAL NUMBER.

⚠ WARNING

DO NOT REMOVE OR COVER ANY SAFETY DECAL. Replace any safety decal that becomes damaged or illegible.

7.11 DECALS (2 OF 2)

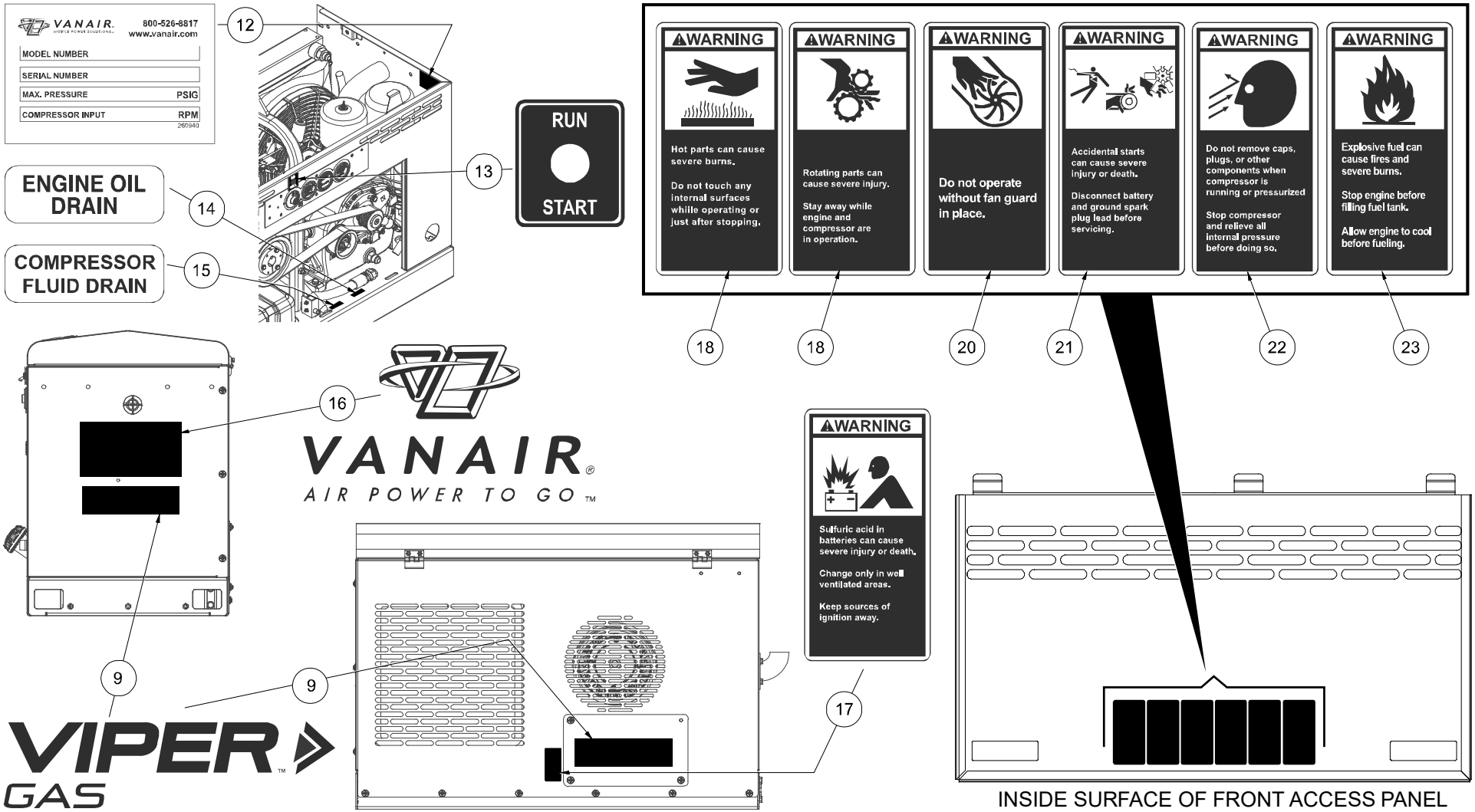

7.11 DECALS (2 OF 2)

ITEM	DESCRIPTION	PART NUMBER	QTY	ITEM	DESCRIPTION	PART NUMBER	QTY
1	DECAL, ROTARY SCREW OIL	272501	1	13	DECAL, START/RUN GAS VIPER	276775	1
2	DECAL, WARNING ELECTRIC TAMPER	271510	1	14	DECAL, COMPRESSOR FLUID DRAIN	275054	1
3	DECAL, VANAIR ADDRESS	265605	1	15	DECAL, ENGINE OIL DRAIN	275053	1
4	DECAL, WARNINGS INTERIOR GAS VIPER	275052	1	16	LOGO, VANAIR STACKED - AIR POWER TO GO	275039-C	1
5	DECAL, REPLACEMENT PART NUMBERS VIPER G SERIES	278231	1	17	DECAL, WARNING-ACID	264375	1
6	DECAL, WIRING DIAGRAM	275015	1	18	DECAL, HOT PARTS	264372	1
7	DECAL, COMPRESSOR MAINTENANCE GAS VIPER	275100	1	19	DECAL, ROTATING PARTS	264374	1
8	DECAL, VANAIR AIR POWER TO GO (21.3" LENGTH)	275038-C	1	20	DECAL, FAN GUARD	264378	1
9	DECAL, LOGO VIPER HORIZONTAL (12.5" LENGTH)	75037-A	3	21	DECAL, ACCIDENTAL STARTS	264373	1
10	DECAL, DECAL, WARNING FUEL FILL GAS VIPER	275070	1	22	DECAL, CAP AND PLUG REMOVAL	264383	1
11	DECAL, WARNINGS EXTERIOR GAS VIPER	275051	1	23	DECAL, EXPLOSIVE FUEL	264377	1
12	PLATE, SERIAL VANAIR	260940	1				

PLEASE NOTE: WHEN ORDERING PARTS, INDICATE MACHINE SERIAL NUMBER.

⚠ WARNING

DO NOT REMOVE OR COVER ANY SAFETY DECAL. Replace any safety decal that becomes damaged or illegible.

7.12 SCHEMATIC FLOW DIAGRAM WITH AIR CYLINDER

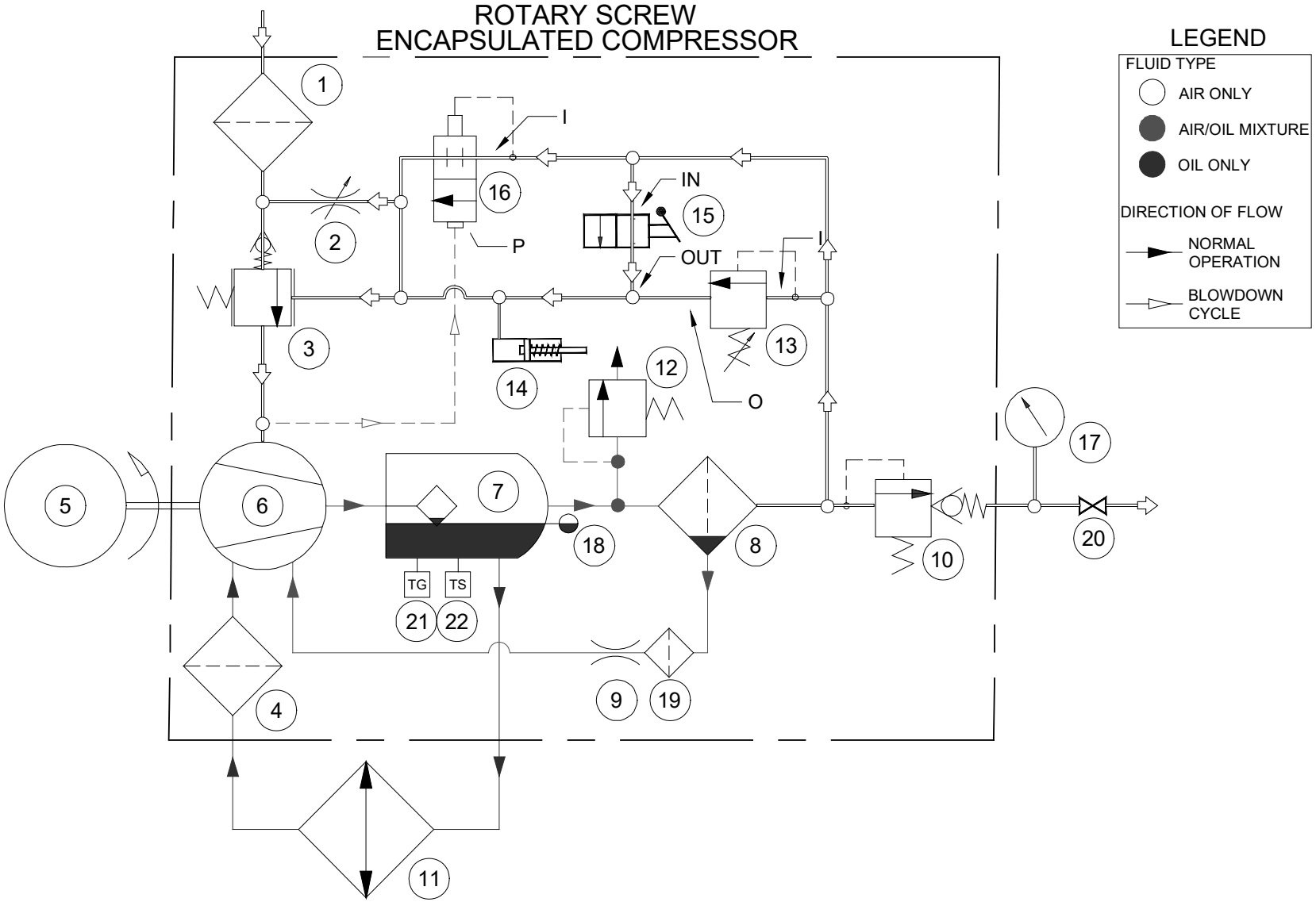

276656_r3

7.12 SCHEMATIC FLOW DIAGRAM WITH AIR CYLINDER

KEY LEGEND

1	AIR FILTER		12	PRESSURE RELIEF VALVE
2	BLOWDOWN ORIFICE		13	PRESSURE REGULATOR
3	INLET VALVE		14	SPEED CONTROL CYLINDER
4	OIL FILTER		15	VALVE, AIR TOGGLE 3-WAY
5	ENGINE		16	BLOWDOWN VALVE
6	COMPRESSOR		17	PRESSURE GAUGE
7	OIL SEPARATION TANK		18	OIL LEVEL SIGHT GLASS
8	COALESCER ELEMENT		19	STRAINER
9	SCAVENGER ORIFICE		20	SERVICE VALVE
10	MINIMUM PRESSURE VALVE		21	TEMPERATURE GAUGE SENDER
11	OIL COOLER		22	FAN TEMP SWITCH

7.13 HOSE INSTALLATION GUIDE

HOSE LAYOUT CONSIDERATION	WRONG	RIGHT	HOSE LAYOUT CONSIDERATION	WRONG	RIGHT
1. Hose is weakened when installed in twisted position. Pressure in twisted hose tends to loosen fitting connections. Design so that machine motion produces bending rather than twisting.	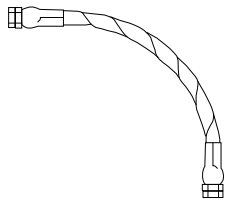	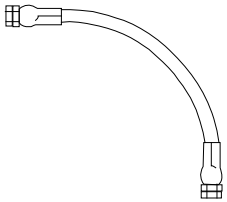	4. Use elbows or other adapters as necessary to eliminate excess hose length and to insure neater installation for easier maintenance.	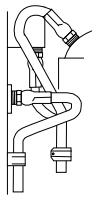	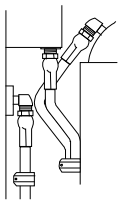
2. Ample bend radius should be provided to avoid collapsing of line and restriction of flow.			5. When hose assembly is installed in a flexing application, remember that metal hose fittings are not part of the flexible portion. Allow ample free length for flexing.		
3. Exceeding minimum bend radius will greatly reduce hose assembly life.	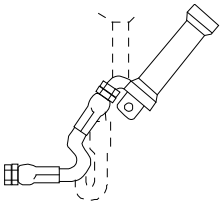	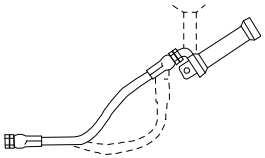	6. When properly routing, use clamps to secure the hose in its proper position.	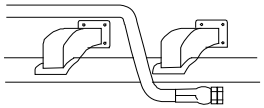	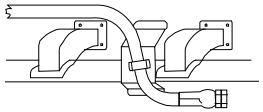

TABLE 7B: MAINTENANCE TRACKING LOG

DATE	DESCRIPTION OF MAINTENANCE	PART(S) REPLACED

VANAIR®

POWER TO GO™

Vanair Manufacturing, Inc.

10896 West 300 North

Michigan City, IN 46360

Telephone (toll free): (800) 526-8817

Service (toll free): (844) VAN-SERV

(844) 826-7378

Telephone: (219) 879-5100

Service Fax: (219) 879-5335

Parts Fax: (219) 879-5340

Sales Fax: (219) 879-5800

www.vanair.com

Printed in the U.S.A.

Specifications subject to
change without prior notice

0512587-002

AUGUST-2020